Physics 202/208 Lab Manual

Electricity and Magnetism, Sound/Waves, Light, Modern Physics

R. Rollefson, H.T. Richards, M.J. Winokur

July 20, 2009

NOTE: E=Electricity and Magnetism, S=Sound and Waves, L-Light, MP=Modern Physics, C=Computerized Experiment

Contents

Forward **3**

Introduction **5**

Errors and Uncertainties **9**

Using the Computers: Printing **16**

I Electricity and Magnetism **17**

E-1: Electrostatics **17**

EC-2: Electric Fields **24**

EC-3 Capacitors and RC-decay **28**

E-4 Electron Charge to Mass Ratio **35**

EC-5 Magnetism **41**

EC-5a Lenz's Law 41
EC-5b Induction - Dropping Magnet 42
EC-5c Induction - Test Coil 44
EC-5d Induction - Faraday Discovery 47

E-6: Cathode Ray Oscilloscope and Differential Amplifiers **51**

E-7: A.C. Circuits **60**

E-8: Transistors **66**

II Sound and Waves 69

SC-1 Transverse Standing Waves on a String 69

S-2 Velocity of Sound in Air 74

III Light 75

LC-1: Diffraction and Interference 75

LC-2: Mirrors and Lenses 79

L-3: Optical Instruments 84

L-4: The optics of the eye and resolving power 88

L-5: Spectrometer and the H Balmer Series 91

L-6: Polarization 98

IV Modern Physics 102

MPC-1 Radiation and its Interaction with Matter 102
MPC-1a Random Events - Counting Statistics 102
MPC-1b: Absorption of Radiation 108

Appendices 113
A. Precision Measurement Devices 113
B. The Travelling Microscope 117
C. The Optical Lever 118
D. PARALLAX and Notes on using a Telescope 119
E. Notes on Radiation Dosage, Dosimetry, and the Radon Problem 121
F. PASCO© Interface and Computer Primer 124

NOTE: E=Electricity and Magnetism, S=Sound and Waves, L-Light, MP=Modern Physics, C=Computerized Experiment

Forward

Spring, 2005

This version is only modestly changed from the previous versions. We are gradually revising the manual to improve the clarity and interest of the activities. In particular the dynamic nature of web materials and the change of venue (from Sterling to Chamberlin Hall) has required a number of cosmetic and operational changes. In particular the PASCO computer interface and software have been upgraded from Scientific Workshop to DataStudio.

M.J. Winokur

In reference to the 1997 edition

Much has changed since the implementation of the first edition and a major overhaul was very much in need. In particular, the rapid introduction of the computer into the educational arena has drastically and irreversibly changed the way in which information is acquired, analyzed and recorded. To reflect these changes in the introductory laboratory we have endeavored to create a educational tool which utilizes this technology; hopefully while enhancing the learning process and the understanding of physics principles. Thus, when fully deployed, this new edition will be available not only in hard copy but also as a fully integrated web document so that the manual itself has become an interactive tool in the laboratory environment.

As always we are indebted to the hard work and efforts by Joe Sylvester to maintain the labortory equipment in excellent working condition.

M.J. Winokur
M. Thompson

From the original edition

The experiments in this manual evolved from many years of use at the University of Wisconsin. Past manuals have included "cookbooks" with directions so complete and detailed that you can perform an experiment without knowing what you are doing or why, and manuals in which theory is so complete that no reference to text or lecture was necessary.

This manual avoids the"cookbook" approach and assumes that correlation between lecture and lab is sufficiently close that explanations (and theory) can be brief: in many cases merely a list of suggestions and precautions. Generally you will need at least an elementary understanding of the material in order to perform the experiment expeditiously and well. We hope that by the time you have completed an experiment, your understanding will have deepened in a manner not achievable by reading books or by working "paper problems". If the lab should get ahead of the lecture, please read the pertinent material, as recommended by the instructor, before doing the experiment.

The manual does not describe equipment in detail. We find it more efficient to have the apparatus out on a table and take a few minutes at the start to name the pieces and give suggestions for use. Also in this way changes in equipment, (sometimes necessary), need not cause confusion.

Many faculty members have contributed to this manual. Professors Barschall, Blanchard, Camerini, Erwin, Haeberli, Miller, Olsson, Visiting Professor Wickliffe and former Professor Moran have been especially helpful. However, any deficiencies or errors are our responsibility. We welcome suggestions for improvements.

Our lab support staff, Joe Sylvester and Harley Nelson (now retired), have made important contributions not only in maintaining the equipment in good working order, but also in improving the mechanical and aesthetic design of the apparatus.

Likewise our electronic support staff not only maintain the electronic equipment, but also have contributed excellent original circuits and component design for many of the experiments.

R. Rollefson
H. T. Richards

Introduction

General Instructions and Helpful Hints

Goals

Physics 201/202 and 207/208 are introductory calculus-based physics courses which introduce the undergraduate student to a broad spectrum of fundamental physical laws spanning from mechanics to heat and thermodynamics to electricity and magnetism to waves and light. To help develop a meaningful understanding of these physics principles the beginning student is presented with a variety of resources: textbooks, lectures and demonstrations, problem solving, discussion sessions and the laboratory.

Of these, the laboratory component furnishes a unique opportunity for demonstrating physical principles in both a qualitative and quantitative hands-on fashion. An inseparable aspect of this laboratory experience should be the realization that physics is, first or foremost, an experimental science in which the limitations of the instrumentation and the technique of the experimenter can heavily impact the scientific process. Hence this laboratory experience is intended to provide the student with a diverse set of experiences including: a realistic feeling for the origin and limitations of physical concepts; an awareness of experimental errors, of ways to minimize them and how to estimate the reliability of the result in an experiment; an appreciation of the need for keeping clear and accurate records of experimental investigations.

Throughout this laboratory experience there is one crucial step for achieving these stated goals in an enduring way: Simply put, a clearly written laboratory notebook in which each of the aforementioned components is documented and recorded. This lab notebook, at a minimum, should contain the following:

1. *Heading of the Experiment:* Copy from the manual the number and nameof the experiment.
   Include both the current date and the name(s) of your partner(s).

2. *Original data:* Original data must always be recorded directly into your notebook as they are gathered. "Original data" are the actual readings you have taken. For example if you know that each in a series of distance measurements is in error by a constant offset of 0.006 mm, then you should record the actual readings (containing this error) and then, afterwards, either correct each data point or the average. In this way it will always be clear that you have made appropriate corrections. Also, when you take 5 or 6 successive readings of a measurement, record each reading, not just the average. From the scatter of the readings, you can estimate the precision of the measurement. Both partners should record data, so that errors of recording show up. (Complete trackability, say if you were producing a part for the space shuttle, would require that you record serial numbers of equipment. You could then find the same equipment to check results later.) Arrange data in tabular form when appropriate, and properly label each item or table.

3. *Housekeeping deletions:* You may think that a notebook combining all work would soon become quite a mess and have a proliferation of erroneous and superseded material. Indeed it might, but you can improve matters greatly with a little housekeeping work every hour or so. Just draw a box around any erroneous or unnecessary material and hatch three or four parallel diagonal lines across this box. (This way

you can come back and rescue the deleted calculations later if you should discover that the first idea was right after all. It occasionally happens.) Append a note to the margin of box explaining to yourself what was wrong.

We expect you to keep up your notes as you go along. Don't take your notebook home to "write it up" – you probably have more important things to do than making a beautiful notebook. (Instructors may permit occasional exceptions if they are satisfied that you have a good enough reason.)

4. *Remarks and sketches:* Avoid, when possible, "pictorial" sketches of apparatus. On the other hand, a simple diagrammatic sketch is useful and is sometimes the simplest and clearest way to define the various quantities indicated in a table of data; *a phrase or sentence introducing each table or calculation is essential for making sense out of the notebook record.* When a useful result occurs at any stage, describe it with at least a word or phrase.

5. *Graphs:* There are three appropriate methods:

   A. Affix furnished graph paper in your notebook with transparent tape.

   B. Affix a computer generated graph paper in your notebook with transparent tape.

   C. Mark out and plot a simple graph directly in your notebook.

   Show points as dots, circles, or crosses, i.e., $\cdot$, $\circ$, or $\times$. Instead of connecting points by straight lines, draw a smooth curve which may actually miss most of the points but which shows the functional relationship between the plotted quantities. Fasten directly into the notebook any original data in graphic form (such as the spark tapes of Experiment M4).

6. *Units, coordinate labels:* Physical quantities *always* require a number and a dimensional unit to have meaning. Likewise, graphs have *abscissas* and *ordinates* which always need labeling.

7. *Final data, results and conclusions:* At the end of an experiment some written comments and a neat summary of data and results will make your notebook more meaningful to both you and your instructor. Note that perfect results are not essential when making a quantitative measurement. "Good" results occur when your value agrees, within appropriate limits of error, with the expected result. "Bad" results occur if the measured value falls outside the range given by uncertainty. This latter result may be perfectly acceptable if a satisfactory explanations (i.e., a legitimate error) for the failure can be forwarded. In fact, most people seem to learn more from their failures rather than their successes.

Expt. M1 Systematic and Random Errors, Significant Figures,
Density of a Solid

NAME: Jane.Q. Student Date: 2/29/00
Partner: John Q. Student

Purpose: To develop a basic understanding of systematic and random errors in a physical measurement by obtaining the density of metal cylinder.

Equiment: Venier caliper, micrometer, precision gauge block, precision balance

Theory: $\rho =$ mass/($\pi *$ r**2 h)

$$\Delta\rho = \sqrt{(\Delta\ m\ /m)**2.+(\Delta\ h/h)**2.+(\ 2\ \Delta\ r/r)**2.}\quad \rho$$

DATA:

1. Calibration of micrometer

Reading with jaws fully closed:

1. 0.000013 mm $\pm$ 0.000001 mm
2. 0.000014 mm
3. 0.000012 mm
4. 0.000014 mm Micrometer exhibits a systematic zero offset
5. 0.000015 mm

Ave, $\pm$ Standard Deviation

Measure four calibraton gauge blocks

Plot of micrometer error vs. gauge block length

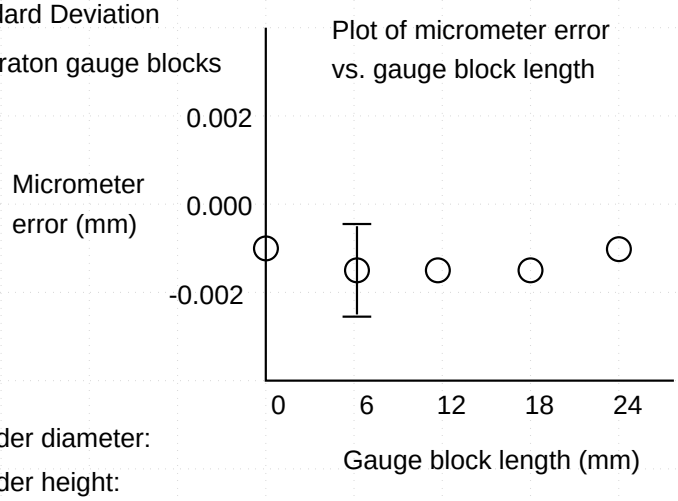

Measure of cylinder diameter:

Measure of cylinder height:

Measure of cylinder mass

CALCULATIONS:

Density= ??? Uncertainty from propagation of error.

RESULTS and CONCLUSIONS:

PARTNERS

Limitations of space and equipment usually require that one works with a partner. In addition, discussing your work with someone as you go along is often stimulating and of educational value.

Independent calculations; checks: If possible both partners should perform completely independent calculations. Mistakes in calculation are inevitable, and the more complete the independence of the two calculations, the better is the check against these mistakes. Poor results on experiments sometimes arise from computational errors.

CHOICE OF NOTEBOOK

We recommend a large bound or spiral notebook with paper of good enough quality to stand occasional erasures (needed most commonly in improving pencil sketches or graphs). To correct a wrong number always cross it out instead of erasing: thus ~~3.1461~~ 3.1416 since occasionally the correction turns out to be a mistake, and the original number was right. Coarse (1/4 inch) cross-ruled pages are more versatile than blank or line pages. They are useful for tables, crude graphs and sketches while still providing the horizontal lines needed for plain writing. Put everything that you commit to paper right into your notebook. Avoid scribbling notes on loose paper; such scraps often get lost. A good plan is to write initially only on the right-hand pages, leaving the left page for afterthoughts and for the kind of exploratory calculations that you might do on scratch paper.

COMPLETION OF WORK

Plan your work so that you can complete calculations, graphing and miscellaneous discussions before you leave the laboratory. Your instructor will check each completed lab report and will usually write down some comments, suggestions or questions in your notebook.

Your instructor can help deepen your understanding and "feel" for the subject. Feel free to talk over your work with him or her.

Using the Computers: Printing You will want to avoid printing two copies in rapid succession. Wait for your computer to finish "spooling" before sending your next print job, or you risk crashing your computer and thereby loosing all your data.

Errors and Uncertainties

Reliability estimates of measurements greatly enhance their value. Thus, saying that the average diameter of a cylinder is 10.00 ± 0.02 mm tells much more than the statement that the cylinder is a centimeter in diameter.

To physicists the term "**error**" is interchangeable with "**uncertainty**" and does **not** have the same meaning as "**mistake**". Mistakes, such as "errors" in calculations, should be corrected before estimating the experimental error. In estimating the reliability of a single quantity (such as the diameter of a cylinder) we recognize several different kinds and sources of error:

FIRST, are **actual variations** of the quantity being measured, e.g. the diameter of a cylinder may actually be different in different places. You must then specify where the measurement was made; or if one wants the diameter in order to calculate the volume, first find the average diameter by means of a number of measurements at carefully selected places. Then the scatter of the measurements will give a first estimate of the reliability of the average diameter.

SECOND, the micrometer *caliper used may itself* be in error. The errors thus introduced will of course not lie equally on both sides of the true value so that averaging a large number of readings is no help. To eliminate (or at least reduce) such errors, we calibrate the measuring instrument: in the case of the micrometer caliper by taking the zero error (the reading when the jaws are closed) and the readings on selected precision gauges of dimensions approximately equal to those of the cylinder to be measured. We call such errors **systematic**, and these cause errors on accuracy.

THIRD, Another type of **systematic** error can occur in the measurement of a cylinder: The micrometer will always measure the largest diameter between its jaws; hence if there are small bumps or depressions on the cylinder, the average of a large number of measurements will not give the true average diameter but a quantity somewhat larger. (This error can of course be reduced by making the jaws of the caliper smaller in cross section.)

FINALLY, if one measures something of definite size with a calibrated instrument, errors of measurement still exist which (one hopes) are as often **positive** as **negative** and hence will **average out** in a large number of trials. Such errors are called random, and result in less precision. For example, the reading of the micrometer caliper may vary because one can't close it with the same force every time. Also the observer's estimate of the fraction of the smallest division varies from trial to trial. Hence the average of a number of these measurements should be closer to the true value than any one measurement. Also the **deviations** of the individual measurements from the **average** give an indication of the **reliability** of that average value. The typical value of this deviation is a measure of the precision. This average deviation has to be calculated from the absolute values of the deviations, since otherwise the fact that there are both positive and negative deviations means that they will cancel. If one finds the average of the absolute values of the deviations, this **"average deviation from the mean"** may serve as a measure of reliability. For example, let column 1 represent 10 readings of the diameter of a cylinder taken at one place so that variations in the cylinder do not come into consideration, then column 2 gives the magnitude (absolute) of each reading's deviation from the mean.

Measurements	Deviation from Ave.	
9.943 mm	0.000	
9.942	0.001	
9.944	0.001	
9.941	0.002	
9.943	0.000	
9.943	0.000	
9.945	0.002	Diameter =
9.943	0.000	
9.941	0.002	9.943±0.001 mm
9.942	0.001	
Ave = 9.943 mm	Ave = 0.0009 mm≈0.001 mm	

Expressed algebraically, the average deviation from the mean is $= (\sum |x_i - \bar{x}|)/n)$, where x_i is the ith measurement of n taken, and $\bar{x}$ is the mean or arithmetic average of the readings.

Standard Deviation:

The average deviation shown above is a measure of the spread in a set of measurements. A more easily calculated version of this is the standard deviation σ (or **root mean square deviation**). You calculate σ by evaluating

$$\sigma = \sqrt{\frac{1}{n}\sum_{i=1}^{n}(x_i - \overline{x})^2}$$

where $\overline{x}$ is the mean or arithmetical average of the set of n measurements and x_i is the ith measurement.

Because of the square, the standard deviation σ weights large deviations more heavily than the average deviation and thus gives a less optimistic estimate of the reliability. In fact, for subtle reasons involving degrees of freedom, σ is really

$$\sigma = \sqrt{\frac{1}{(n-1)}\sum_{i=1}^{n}(x_i - \bar{x})^2}$$

σ tells you the typical deviation from the mean you will find for an individual measurement. *The mean $\bar{x}$ itself should be more reliable.* That is, if you did several sets of n measurements, the typical means from different sets will be closer to each other than the individual measurements within a set. In other words, the uncertainty in the mean should be less than σ. It turns out to reduce like $1/\sqrt{n}$, and is called **the error in the mean** σ_μ:

$$\sigma_\mu = \text{error in mean} = \frac{\sigma}{\sqrt{\mathrm{n}}} = \frac{1}{\sqrt{\mathrm{n}}}\sqrt{\frac{1}{\mathrm{n}-1}\sum_{\mathrm{i}=1}^{\mathrm{n}}(\mathrm{x_i} - \bar{\mathrm{x}})^2}$$

For an explanation of the $(n-1)$ factor and a clear discussion of erros, see P.R. Bevington and D.K Robinson, *Data Reduction and Error Analysis for the Physical Sciences*, McGraw Hill 1992, p. 11.

If the error distribution is "normal" (i.e. the errors, ϵ have a Gaussian distribution, $e^{-\epsilon^2}$, about zero), then on average 68% of a large number of measurements will lie closer

than σ to the true value. While few measurement sets have precisely a "normal" distribution, the main differences tend to be in the tails of the distributions. If the set of trial measurements are generally bell shaped in the central regions, the "normal" approximation generally suffices.

Relative error and percentage error:
Let ϵ be the error in a measurement whose value is a. Then $(\frac{\epsilon}{a})$ is the relative error of the measurement, and 100 $(\frac{\epsilon}{a})\%$ is the percentage error. These terms are useful in laboratory work.

SYSTEMATIC ERRORS IN THE LABORATORY STANDARDS OF LENGTH, TIME AND MASS

For the experiments in this manual these systematic errors are usually negligible compared to other uncertainties. An exception sometimes occurs for the larger masses especially the 100 gram, the 500 gram, and 1 kg masses. Some contain drilled holes into which lead shot and a plug have been added to adjust the mass to within tolerance (typically 1.000 ± 0.003 kg). Occasionally a plug works loose and the calibration lead shot is lost. You can check the assigned mass values by weighing them on the triple beam balances. Report any deviations greater than 0.4% to the instructor.

UNCERTAINTY ESTIMATE FOR A RESULT INVOLVING MEASUREMENTS OF SEVERAL INDEPENDENT QUANTITIES

A.) If the desired result is the *sum* or *difference* of two measurements, the *ABSOLUTE uncertainties ADD*:
Let Δx and Δy be the errors in x and y respectively. For the *sum* we have $z = x + \Delta x + y + \Delta y = x + y + \Delta x + \Delta y$ and the relative error is $\frac{\Delta x + \Delta y}{x+y}$. Since the signs of Δx and Δy can be opposite, adding the absolute values gives a pessimistic estimate of the uncertainty. If errors have a normal or Gaussian distribution and are independent, they combine in quadrature, i.e. the square root of the sum of the squares, i.e.,

$$\Delta z = \sqrt{\Delta x^2 + \Delta y^2}$$

For the *difference* of two measurements we obtain a relative error of $\frac{\Delta x + \Delta y}{x-y}$. which becomes very large if x is nearly equal to y. Hence avoid, if possible, designing an experiment where one measures two large quantities and takes their difference to obtain the desired quantity.

B.) If the desired result involves **multiplying (or dividing)** measured quantities, then the **RELATIVE uncertainty** of the result is the *SUM of the RELATIVE errors* in each of the measured quantities.

Proof:

$$\text{Let} \quad z = \frac{x_1\ x_2\ x_3 .....}{y_1\ y_2\ y_3 .....} \quad \text{and hence}$$

$$\ln z = \ln x_1 + \ln x_2 + \ln x_3 + ... - \ln y_1 - \ln y_2 - \ln y_3 - .....$$

Then find the differential, $d(\ln z)$:

$$d(\ln z) = \frac{dz}{z} = \frac{dx_1}{x_1} + \frac{dx_2}{x_2} + \frac{dx_3}{x_3} + ... - \frac{dy_1}{y_1} + \frac{dy_2}{y_2} + \frac{dy_3}{y_3} - .....$$

Consider finite differentials, Δz, etc. and note that the most pessimistic case corresponds to adding the absolute value of each term since Δx_i and Δy_i can be of either sign. Thus

$$\frac{\Delta z}{z} = \sum_i (\frac{\Delta x}{x}) + \sum_i (\frac{\Delta y}{y})$$

Again, if the measurement errors are independent and have a Gaussian distribution, the relative errors will add in quadrature:

$$\frac{\Delta z}{z} = \sqrt{\sum_i (\frac{\Delta x}{x})^2 + \sum_i (\frac{\Delta y}{y})^2}$$

C.) **Corollary:** If the desired result is a *POWER* of the measured quantity, the *RELATIVE ERROR* in the result is the relative error in the measured quantity *MULTIPLIED by the POWER:* Thus $z = x^n$ and

$$\frac{\Delta z}{z} = n\frac{\Delta x}{x}.$$

The above results also follow in more general form: Let $R = f(x, y, z)$ be the functional relationship between three measurements and the desired result. If one differentiates R, then

$$dR = \frac{\partial f}{\partial x}dx + \frac{\partial f}{\partial y}dy + \frac{\partial f}{\partial z}dz$$

gives the uncertainty in R when the uncertainties dx, dy and dz are known.

For example, consider the density of a solid (Exp. M1). The relation is

$$\rho \;=\; \frac{m}{\pi r^2 L}$$

where m = mass, r = radius, L = length, are the three measured quantities and ρ = density. Hence

$$\frac{\partial \rho}{\partial m} = \frac{1}{\pi r^2 L} \qquad \frac{\partial \rho}{\partial r} = \frac{-2m}{\pi r^3 L} \qquad \frac{\partial \rho}{\partial L} = \frac{-m}{\pi r^2 L^2}$$

and so

$$d\rho = \frac{1}{\pi r^2 L}\, dm + \frac{-2m}{\pi r^3 L}\, dr + \frac{-m}{\pi r^2 L^2}\, dL.$$

To get the relative error divide by $\rho = m/\pi r^2 L$. The result, if one drops the negative signs, is

$$\frac{d\rho}{\rho} = \frac{dm}{m} + 2\frac{dr}{r} + \frac{dL}{L}$$

and represents a worst possible combination of errors. For small increments:

$$\frac{\Delta \rho}{\rho} = \frac{\Delta m}{m} + 2\frac{\Delta r}{r} + \frac{\Delta L}{L}$$

and

$$\Delta \rho = \rho\left[\frac{\Delta m}{m} + 2\frac{\Delta r}{r} + \frac{\Delta L}{L}\right]$$

Again if the errors have normal distribution, then

$$\frac{\Delta \rho}{\rho} = \sqrt{\left(\frac{\Delta m}{m}\right)^2 + \left(2\frac{\Delta r}{r}\right)^2 + \left(\frac{\Delta L}{L}\right)^2}$$

SIGNIFICANT FIGURES

Suppose you have measured the diameter of a circular disc and wish to compute its area $A = \pi d^2/4 = \pi r^2$. Let the average value of the diameter be 24.326 ± 0.003 mm ; dividing d by 2 to get r we obtain 12.163 ± 0.0015 mm with a relative error $\frac{\Delta r}{r}$ of $\frac{0.0015}{12} = 0.00012$. Squaring r (using a calculator) we have $r^2 = 147.938569$, with a relative error $2\Delta r/r = 0.00024$, or an absolute error in r^2 of $0.00024 \times 147.93\cdots = 0.036 \approx 0.04$.

Thus we can write $r^2 = 147.94 \pm 0.04$, any additional places in r^2 being unreliable. Hence for this example the first five figures are called *significant*.

Now in computing the area $A = \pi r^2$ how many digits of π must be used? A pocket calculator with $\pi = 3.141592654$ gives

$$A = \pi r^2 = \pi \times (147.94 \pm 0.04) = 464.77 \pm 0.11 \text{ mm}^2$$

Note that $\frac{\Delta A}{A} = 2\frac{\Delta r}{r} = 0.00024$. Note also that the same answer results from $\pi = 3.1416$, but that $\pi = 3.142$ gives $A = 464.83 \pm 0.11$ mm^2 which differs from the correct value by 0.06 mm^2, an amount comparable to the estimated uncertainty.

A good rule is to use one more digit in constants than is available in your measurements, and to save one more digit in computations than the number of significant figures in the data. When you use a calculator you usually get many more digits than you need. Therefore **at the end**, be sure to **round off** the final answer to display the correct number of **significant figures.**

SAMPLE QUESTIONS

1. How many significant figures are there in the following number?

   (a) 976.45

   (b) 4.000

   (c) 10

2. Round off each of the following numbers to three significant figures.

   (a) 4.455

   (b) 4.6675

   (c) 2.045

3. A function has the relationship $Z(A, B) = A + B^3$ where A and B are found to have uncertainties of $\pm\Delta A$ and $\pm\Delta B$ respectively. Find ΔZ in term of A, B and the respective uncertainties assuming the errors are uncorrelated.

4. What happens to σ, the standard deviation, as you make more and more measurements? what happens to $\overline{\sigma}$, the standard deviation of the mean?

   (a) They both remain same

   (b) They both decrease

   (c) σ increases and $\overline{\sigma}$ decreases

   (d) σ approachs a constant and $\overline{\sigma}$ decreases

Suggestions on Form for Lab Notebooks:

NUMBER AND TITLE (e.g. E1. ELECTROSTATICS)

Date performed:_____ Partner:_____

Subdivisions: If appropriate, name and number each section as in the manual.

DATA:

Label numbers and give units. In a few words, state what quantities you measured. If appropriate, record the data in tabular form. Label the tables and give units.

CALCULATIONS:

State the equations used and present a sample calculation. (Inclusion of the arithmetic is not necessary.)

CONCLUSIONS:

If any important conclusions follow from the experiments, state them and show by a brief statement how they follow. Compare your results with accepted values if the experiment has involved the measurements of a physical constant.

Errors:

Some of your experiments will be qualitative while others will involve quantitative measurements of physical constants. Where it is appropriate, estimate the uncertainty of each measurement used in a calculation and compute the uncertainty of the result. Does your estimate of uncertainty indicate satisfactory agreement between your result and the accepted one (or between your several values if you have several)? Intelligent discussion is welcomed, but don't make this section a burden on you.

Using the Computers: Printing

You will want to avoid printing two copies in rapid succession. Wait for your computer to finish "spooling" before sending your next print job, or you risk crashing your computer and thereby loosing all your data.

Part I
Electricity and Magnetism

E-1: Electrostatics

PART I. THE ELECTROSCOPE

OBJECTIVE: To use an electroscope to study electrostatic phenomena.

APPARATUS:

1. A wooden box containing: aluminum-leaf electroscope, insulated hollow sphere proofball, hard rubber rod, rabbit fur, lucite rod, silk cloth.

INTRODUCTION:

In this lab you will use a deceptively simple device, an electroscope, to study the nature of charge. The electroscope's primary working parts are two connected conducting foil leaves. Charge appears in two forms, positive and negative, and like charges repel. At this point the only meaningful distinction between a conductor and an insulator is that a conductor allows charge to flow (in analogy to water in a pipe) whereas insulators do not. Thus as charge is placed on (or near) the conducting electroscope knob at top, the like charge in the electroscope assembly will redistribute so as to move as far away from charge on the rod and electroscope as physically possible. Since the hanging foil leaves of the electroscope are extremely lightweight the repulsive force between the like charges on each leaf is sufficient to force the leaves apart; the greater the charge the greater the angular displacement. In the schematic below we demonstrate the physical response.

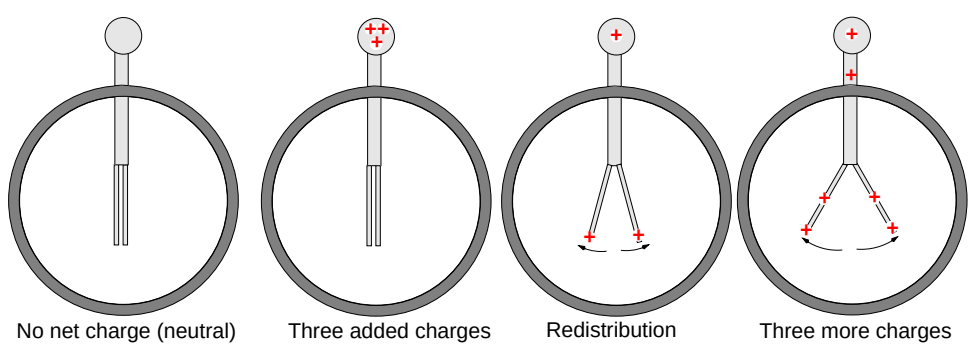

Figure 1: *Qualitative* schematic of electroscope response.

Preliminary Question: Will the charge in the electroscope assembly redistribute itself if a charged object is brought close to (but does not touch) the conducting knob? If so, will the net charge on the knob be of the same or opposite sign? What will be the sign of the charge on the foil leaves be?

Suggestions and precautions

1. In humid air insulators may adsorb enough moisture that charges leak off rapidly. If so, dry all insulators with a heat gun.

2. In very dry or cold weather the humidity is so low that clothing, table tops, etc. become good insulators. Their large surface charges may influence nearby unshielded instruments. If so, ask your instructor for help; e.g. use grounded foil to shield against them. Also remove any clinging loose bits of fiber (e.g. silk or rabbit fur) that may disturb results.

3. The fragile leaves of the electroscope may tear if charged too heavily. **Do not disassemble electroscope** to attempt repair: see your instructor.

4. To remove charges on the glass windows of the electroscope, lightly rub your hands over the windows while grounding your body.

5. Charges on the insulating handle of a proofball can cause serious measuring errors. Test the handle by grasping the ball with one hand (while the other hand touches the electroscope ground), and then bring parts of the insulating handle close to the electroscope knob. If the leaves move, the handle is charged.

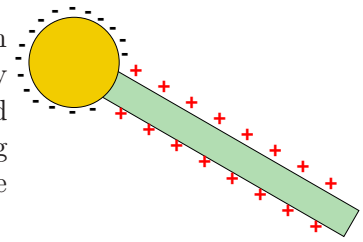

   To discharge it, hold the handle in a source of ionized air. The charged insulator will attract ions of the opposite sign until it is neutral. An open flame is a simple source of both positive and negative ions. The heated air convects these ions upward so **hold the insulator at least 10 cm above open flame to avoid heat damage to the insulator**. Avoid unnecessary handling of insulators because handling may impair their insulating capability. (Perspiration is a salt solution which is a conductor.)

6. Ground the electroscope *case* to a grounding jack near the electrical outlet. Leave it grounded throughout the experiment.

EXPERIMENTS:

1. Charge a rubber rod negatively (-) by rubbing with fur, and transfer some of the charge to the electroscope leaves by touching the rod to the electroscope knob. See diagram A. Note what happens when a (-) charged rod approaches the knob (diagram B). Without grounding the electroscope, also observe and diagram what happens when a lucite rod rubbed with silk approaches the knob.

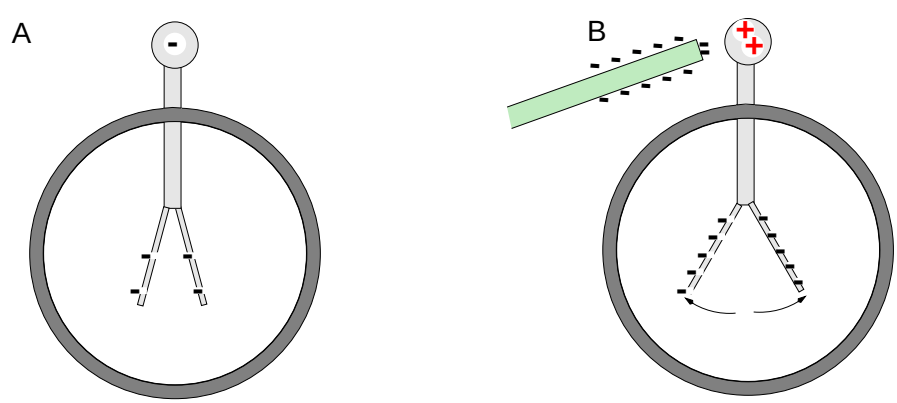

2. **Charging by induction** (First discharge the electroscope by touching the knob and case simultaneously.) To **charge by induction** make the leaves diverge by bringing up a (-) charged rod: keeping the rod fixed, **ground the knob** to the case,

break the ground and then **remove the rod**. Explain with diagrams each step of the process. Show by diagrams what happens when a (-) charge is brought near the knob; a positive (+) charge. Explain each step briefly.

3. In the following give the proofball a charge of known sign by contact with a charged lucite or rubber rod. **Use diagrams to explain and record results**.

   a. Connect the hollow conductor to electroscope knob by fine wire. Discharge them. Charge proofball by touching[1] it to a charged rubber or lucite rod, then introduce the proofball into the hollow conductor but without contacting the conductor. (If your proofball won't hold charge, you can try cleaning or heating the handle, or putting the lucite rod into the hollow conductor directly.) Ground the hollow conductor by touching it. Note behavior of electroscope. Break the ground and remove proofball. Test the sign of charge on the electroscope.

   b. Repeat part a, but now ground the hollow conductor by touching it **only on the inside** with your finger or a short conductor. Explain.

PART II. Use of ELECTROMETER (a sensitive voltmeter)

OBJECTIVE:

To measure potential (voltage) differences (i.e. the work/charge to move a small test charge between two conductors) and thus, in an indirect fashion, charges.

Preliminary Questions:

1. Does the electroscope allow you to discern the absolute sign of a charge?
2. If you are given a spherical conductor where does the excess charge reside?

APPARATUS:

PASCO electrometer & power supply; two hollow conducting spheres, one open hollow sphere; two charge producing paddles (white & blue), one aluminum paddle; proofball; insulated cup and shield: **do not carry the cup and shield by the top cover** (it may separate causing the cup to drop and become damaged); heat gun; alcohol lamp.

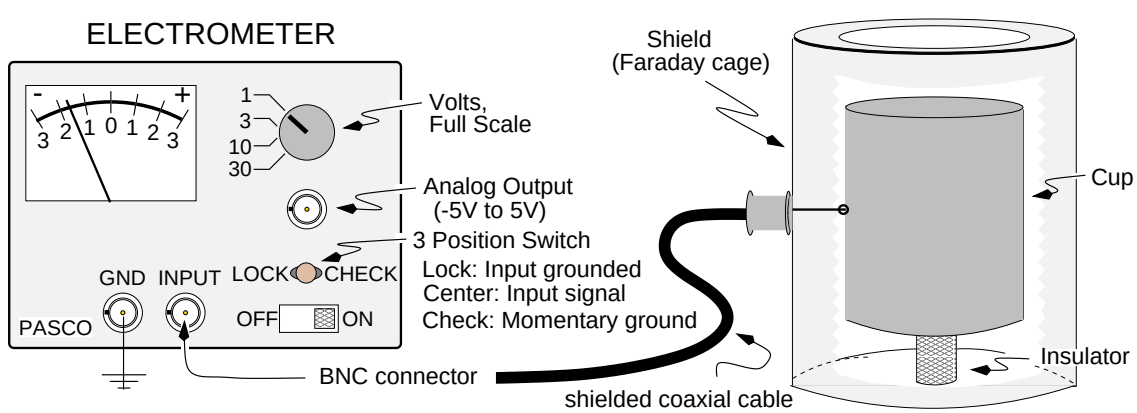

[1]Avoid rubbing which may result in charge separation of opposite sign (depending on the proofball metal and type of insulator: "triboelectric series", see exp #6 of Part II).

INTRODUCTION:

The electrometer reads the difference of potential (in volts) between the center terminal of the input and the grounded shield. (Normally electrometers perform floating measurements, i.e., both the positive and negative side of the measurement is allowed to be any voltage. For convenience our electrometer has been modified to force the negative side to be ground.) What makes the electrometer special is that the electrometer's input resistance is so high, $\sim 10^{14}\ \Omega$, that negligible current flows and hence discharging effects are negligible. Typical handheld voltmeters have resistances five to six orders of magnitude *smaller*. (For the circuit "layout," see your instructor.) From the several voltage ranges, choose one that gives a large but less than full scale deflection. Accuracy is about $\pm$ 3% of full scale. Connect the insulated cup and shield to the electrometer as shown in the sketch. The electrometer measures the potential difference between the cup and grounded shield. *This potential is proportional to the quantity of charge on the cup if the surrounding aluminum can furnishes a perfect shield from external charged objects.*

PRECAUTIONS: These are needed for reliable measurements:

1. Large static charges (common in dry weather) if applied to electrometer input may damage the sensitive input **f**ield **e**ffect **t**ransistor ("FET"). Minimize this possibility by *keeping the electrometer input grounded via the SHORT switch during the initial hook up and when you are done with the experiment.* Also use a banana plug lead to connect the GND terminal of the electrometer to the ground jack near an electrical outlet. In otherwords:
   Keep the Input switch in the "Short before making connections" position whenever there is nothing connected to the input or while you are making a connection. (In older models, this switch may be labled "lock." It is the left position in either case.) After the connection is made, you put the switch in the Input position. If you need to get rid of charge that may have been collected, you can move the switch to either of the short positions, the "momentary" positionusually being more convenient.
2. If your clothing or hair has a net charge, the electrometer reading may change if you move around. Hence, during a given measurement, change position as little as possible and ground yourself (e.g. touch the grounded shield all the time during a measurement or connect a bare wire from your body to ground. Note that grounding yourself is usually a *bad* idea when working with electronics, because of the danger of electrocution. Be careful not to touch any voltage sources while you are grounded.)
3. To remove all charge from the cup, switch the electrometer momentarily to the CHECK position. (This connects the electrometer terminals to each other so that any charge flows from/to ground). If the meter does not read zero, notify your instructor. adjust to zero
4. Always discharge paddles and cup before starting an experiment. To test if an object is charged, put it into the cup and see whether the electrometer deflects. Conductors discharge easily by touching them to a grounded conductor. To discharge an insulator, you must create sufficient ions in the surrounding air. The insulator will then attract ions of the opposite charge until all charge is neutralized. An open flame is a simple source of ionized air; the ions in the flame convect upward with the hot gas. **To avoid damage to the insulator, keep it at least 10 cm above the flame**!

SUGGESTED EXPERIMENTS:

1. Rub the blue and white paddles together and determine which paddle has a net positive charge and which has a net negative charge. Explain the following experiments with diagrams showing charge distributions, e.g. appropriate sample diagrams for this experiment are:

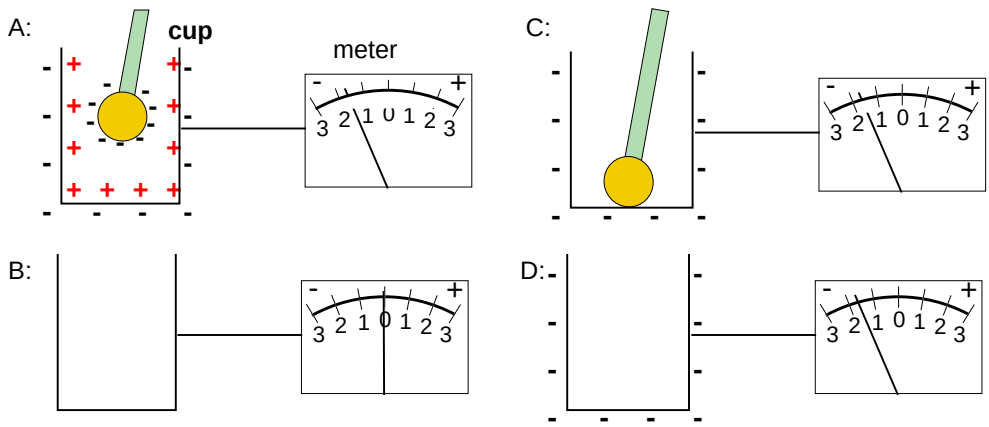

2. Discharge both the blue and the white paddles. Gently rub the white and the blue surfaces of the paddles together. Then:

   a) Hold one of them near the bottom of the cup, but don't let it touch.
   b) Take the paddle out.
   c) Put it back in, touching the cup this time.
   d) Remove the paddle.

   Record the electrometer reading after each step. Explain the results. Was there any charge left on the paddle at the end?

3. **Charging by induction:** Momentarily ground the cup. Charge one of the paddles, then:

   a) Place paddle in cup without **touching**.
   b) Again momentarily ground the cup.
   c) Remove the paddle.

   Note the reading after each step. Explain what happened at each step.

4. Start with both paddles discharged. Then rub them together. Measure the charge on each. Explain. Compare the amount of charge produced by rubbing two paddles of the **same** kind (borrow one from another group), or by rubbing a metal paddle on a metal paddle, etc. (Surface "dirt" on one paddle may mean you are rubbing dissimilar paddles. Sometimes cleaning the paddles with alcohol makes a big difference.)

5. Discharge the cup and the blue and white paddles. What happens if you place the paddles inside the cup (without touching the cup) and,

   a) you charge them by rubbing while they both are inside the cup?
   b) Take out one paddle?

c) Put it back in?
d) Take out the other?
e) Take them both out?
Observe electrometer reading after each step. Explain.

6. QUESTION: Do only insulators acquire charge by rubbing? Rub the aluminum paddle on the white (or blue) paddle. Determine sign of effect. Arrange the white, blue and aluminum paddles in a series such that the rubbed one with a positive charge is always higher ("triboelectric" series). Tribology is the study of friction.

   NOTE: In the remaining parts you may measure charge and still avoid spurious effects from charges on the insulating handles if you will touch the charged proofball (or paddle) to the bottom of the cup and then remove it from the cup before reading the electrometer. But remember to discharge the cup (by momentarily grounding) before taking the next reading! However, if the potential of the insulating handle is too large (e.g. way off the least sensitive scale), one can still get spurious effects from leakages.

7. Instead of frictional charging, use the DC power supply. The "ground" binding post is internally connected to earth ground. Adjust the voltage to $\cong$ 500V. Charge the hollow sphere to 500V (use a copper wire to connect the sphere to the power supply). **The switch must be in the correct position or no voltage results even though the meter may read**! Discharge the proofball and test that it (and handle!) have zero charge; then touch it to the outside of the hollow sphere and measure its charge. Do the same experiment but touch inside the sphere. What do you conclude?

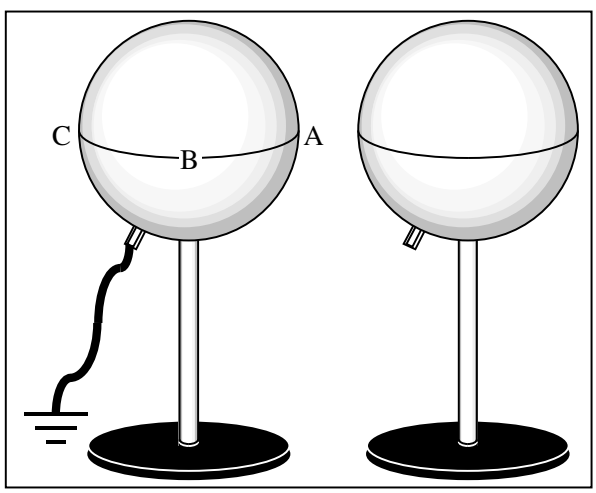

8. Connect the power supply to an isolated solid metal sphere (shown in the next figure). Measure the relative charge density σ at various points of the sphere (such as A, B and C). Charge density σ is $\Delta Q/\Delta A$ where ΔQ is the charge on a small element ΔA of the surface. Since it is not practical to remove a piece of the surface, we place the aluminum paddle **flat** against the surface and measure the charge on the paddle after it is removed. This measurement gives a number only approximately

proportional to the charge density (why?) but does give a good idea of the relative charge distribution.

OPTIONAL: Repeat step 8 but with paddle perpendicular to the surface instead of flat. Can you explain the differences?

9. Discharge the second solid sphere when it is far from the charged sphere. Then move it within a few centimeters of the charged sphere. Explore the charge distribution on both spheres with the paddle. Observe carefully the polarity of charge on different parts of the second sphere.

10. Does a grounded conductor necessarily have no net charge? Momentarily ground the second sphere when it is near the first one, then move it away and see whether it is charged. What is the polarity? Explain.

11. How much deflection does one get if one applies 1000V to the aluminum leaf electroscope? Compare the sensitivity to that of the electrometer (but do **not** connect 1000V to the electrometer or to anything connected to the electrometer e.g. the cup.)

12. Set the electrometer switch in the LOCK position.

EC-2: Electric Fields

OBJECTIVES:

To develop an intuitive understanding of relationship between electric fields and equipotential contours and physically map electric fields in two dimensions.

APPARATUS:

Pasco power supply, (use only 0-30 V DC range); PASCO electrometer plus coaxial cables, leads & two test probes; graphitized paper on which are drawn conducting electrode configurations; field plotting board; carbon paper; pen with silver conductive ink (*use cap when not in use!*) shared between 4 experiments; white paper.

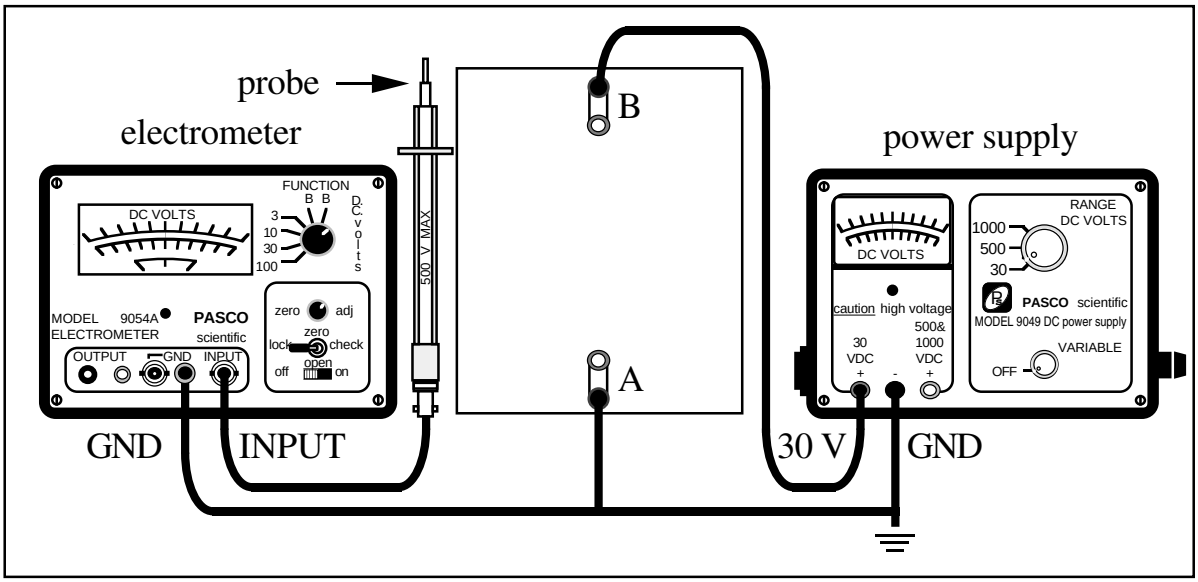

Figure 1: The apparatus.

Preliminary Questions:

1. Do electric fields extend through a vacuum?
2. Do electric fields extend through the interior of an insulator?
3. Do electric fields extend through the interior of a conductor?

INTRODUCTION:

To map electric fields in a plane near charged conductors we use a potential difference to produce a small current in a uniform material of high resistivity which surrounds the conductors. One locates equipotential lines between the conductors by means of probes connected to an electrometer. The lines of the electric field are perpendicular to the equipotential lines. The planar resistance material is a graphite treated piece of paper. The Pasco 0-30 V supply furnishes the current.

For the conductors we need a paint with resistance negligible compared to that of the graphitized paper. A suspension of silver flakes in a carrier which evaporates after painting, is excellent but expensive. Next best is a suspension of very fine copper or nickel flakes; we have mainly used nickel. The suspending fluid, an insulator, evaporates so slowly that recently painted electrodes are not good conductors unless special precautions and procedures are followed:

PRECAUTIONS:

1) *Use adequate ventilation. Avoid inhaling the vapor and avoid contact of the ink with your skin.*
2) Before using, shake the pen vigorously to disperse the particle matter suspended in the ink. Avoid thick layers. *USE CAP THE PEN WHEN NOT IN USE.*
3) Allow 3-5 minutes for the ink to dry (at room temperature: a heat gun will speed the drying, but can easily overheat the surface causing blistering if the layer is thick).

GENERAL METHODOLOGY:

1) Place white paper on the field plotting board, then a piece of carbon paper, and finally the graphitized paper with the conducting electrodes on the top. You may use samples already prepared or draw your own.
2) Record the shape of the electrodes on the white paper by tracing with a hard pencil or a ball point pen.
3) With 24 volts across the terminals of the plotting board (as in Fig. 1) check the quality of your painted electrodes by using the electrometer probe to find whether there is an appreciable potential drop **along** the painted electrode when you have 24 volts **between** the electrodes.

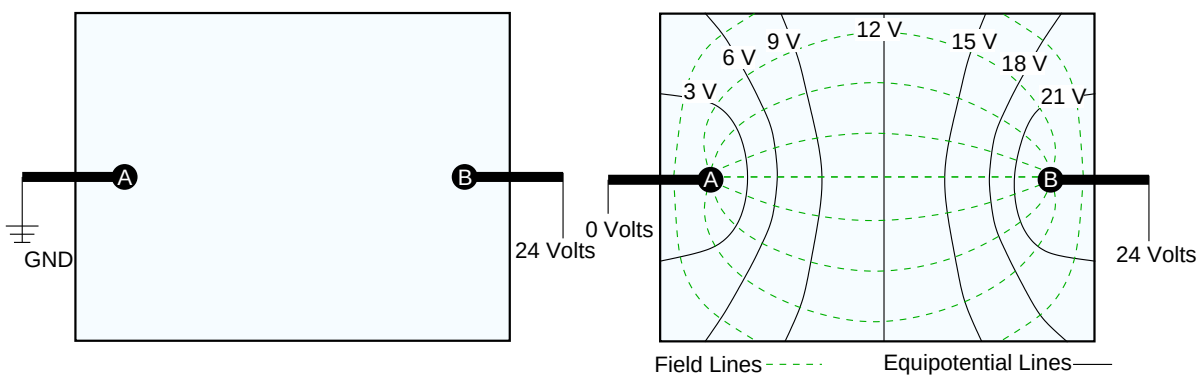

Figure 2: Electrode placement that qualitatively approximates a charge dipole configuration.

4) With 24 volts connected as in Figure 1, ground the electrometer to the power supply ground. For the other electrometer lead use the sharp steel probe. Check the electrometer zero, and then move the sharp steel probe along the graphitized paper from the ground terminal A toward B until the electrometer reads +3 volts. (Hold the probe only by the insulated base, and avoid grounding the graphitized paper with your hand or you may get nonsensical results.) Press down on the sharp probe to record this location as a dot on the underlying white paper.

   Map the equipotential line which corresponds to +3 volts by exploring (with the movable probe) the neighborhood of the first recorded point. Make your recorded points close enough together that you can later draw a smooth line through the points: the points need to be close together only when the direction of the equipotential changes rapidly.

NOTE: Your results, in terms of the actual voltages may vary somewhat from the idealized sketch of Fig. 1 because of contact resistance, leakage currents and other losses. To compensate you can measure the voltage at points very close to the A and B electrodes to find values V_A and V_B respectively and then choosing voltage steps of $(V_B - V_A)/8$.

5) Map other equipotentials: 6 volts, 9 volts,... 21 volts.

6) After you have drawn the equipotentials on the white sheet, dot in a few electric field lines (seven or so) as demonstrated in the right panel of Figure 1 (remembering that electric field lines are always perpendicular to equipotential contours.) latex

ALTERNATIVE METHOD: (OPTIONAL)

For one of your electrode configurations, replace the electrometer ground lead by another coaxial cable connected to a second sharp probe. Place one exploring probe about midway between electrodes A and B. Use the other probe to find positions on the paper which give zero reading on the electrometer. Since these are obviously points of the same potential, they can be connected to map an equipotential line. Map three other equipotential lines approximately equally spaced on each side of the first. This method permits use of the electrometer's most sensitive voltage range and hence allows very precise location of the equipotential points. However, it does not give the potential of the equipotential line.

(NOTE: Since most existing lab electrometers are referenced to ground this only works if your DC power supply 0 V output terminal itself is not grounded.)

SUGGESTIONS:

Map equipotential lines and electric field lines for several of the configurations shown in Figs. 2 or 3 (or create your own test design). The distances are merely suggestions. Return to your instructor the graphitized paper with painted electrodes.

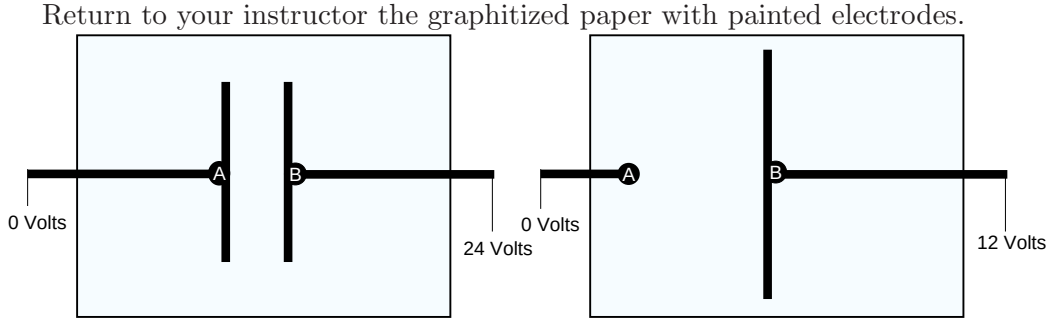

Figure 3: Electrode configurations for (a) parallel plates (left) and (b) "half" dipole (right).

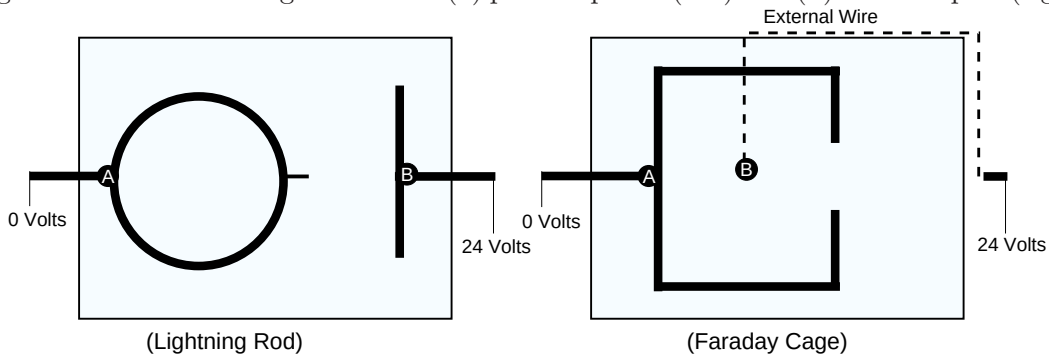

Figure 4: Two other electrode configurations, (a) ligthning rod, (b) Faraday Cage.

In each case map about seven equipotential lines as continuous lines and dot in seven to nine electric field lines as dotted lines. Make clear which is which.

Turn off the electrometer when you finish mapping and *place* the three position switch in the grounded LOCK position.

QUESTIONS:

1. Explain in a sentence or two how you mapped the equipotential lines.
2. For two different electrode configurations, calculate the mean magnitude of the electric field strength where the field is largest, by picking adjacent equipotential contours and measuring the distance between them.
3. Where in Fig. 4(a) do you expect the electric field strength to be strongest? Weakest? Why do experts recommend that if you are caught outside during a thunder shower and cannot obtain shelter that you find a low spot, and curl up your body, while standing on one foot if possible? Note: there are three effects here, two from shape and the other from size, arising from the fact that lightning is caused by excessive electric fields ($> 5000\,\mathrm{V/cm}$), and that currents flow through the paths of least resistance.
4. For Fig. 4(b) do you expect there to be appreciable electric field strength outside the confines of the box? If using the web-version of the lab manual click below on the virtual Faraday Cage demo to study this configuration in more detail.
5. Why must electric field lines be perpendicular to equipotential lines? Hint: Consider the relationship between electric potential and electric field:

$$V_b \;-\; V_a \;=\; -\int_a^b \vec{E}\cdot d\vec{l}$$

   and note that $\mathrm{V}_b = \mathrm{V}_a$ for any points b and a on the equipotential.)
6. For the sketch below see if you can sketch out the electric field lines. Afterwards check your answer (web-version only) by clicking below on the Like Charge Pair demo.

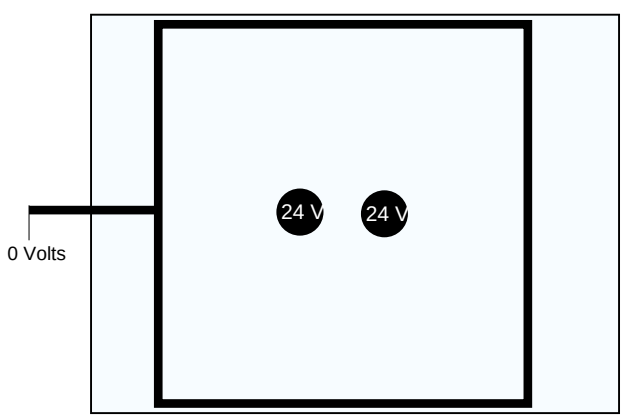

7. If you are you using the web-version of the lab manual, click on the button below to randomly place five unknown charges in a small region of space. Use any information available to determine the relative strength and sign of these five charges.

EC-3 Capacitors and RC-decay

OBJECTIVES:

1. Through use of a parallel-plate capacitor understand the behavior of capacitors.
2. Examine how well a parallel-plate model describes real capacitors.
3. Experiment with the charge and voltage on parallel and series capacitors.

Preliminary Questions:

1. A capacitor plate holds a given charge Q. Why is the magnitude of the plate voltage small when a grounded plate is near, but large (for the same Q) when it is alone?
2. If the charge Q on a capacitor is doubled, what is the change in the voltage one measures on the capacitor? (Remember that Q is the magnitude of the charge on each plate, both positive and negative.)
3. How could you double the positive charge on one capacitor plate without changing the negative charge on the other plate?

APPARATUS:

Conventional equipment: Parallel plate capacitor; Pasco electrometer & power supply; commercial capacitors & resistors on circuit board; aluminum paddle; low capacitance lead, insulated cup and shield; coaxial lead & test probe; BNC to bannana plug adaptor; heat gun.

Computer equipment: Computer, monitor, keyboard, mouse; PASCO interface module; PASCO Voltage Sensor (a pair of leads that plug into PASCO input A).

PRECAUTIONS: These are needed for reliable measurements:

1. The output BNC from the electrometer is calibrated to give 5 V when the meter reads full scale. This means you have to convert the voltage you read from the output in order to get the correct numerical value for the voltage at the input.
2. The input BNC from the electrometer has the outer conductor (the shield) connected to ground (this is true for all BNC connectors unless indicated otherwise on the connector.) This means that you run the risk of discharging your capacitors when you make measurements. Be careful with the polarity when you make measurements.
3. Large static charges (common in dry weather) if applied to electrometer input may damage the sensitive input **f**ield **e**ffect **t**ransistor ("FET"). Minimize this possibility by *keeping the electrometer input grounded via the SHORT switch during the initial hook up and when you are done with the experiment.* (The SHORT switch connects the FET input direct to ground.)In otherwords: **Keep the Input switch in the "Short before making connections" position whenever there is nothing connected to the input or while you are making a connection.** (In older models, this switch may be labled "lock." It is the left position in either case.) After the connection is made, you put the switch in the Input position. If you need to get rid of charge that may have been collected, you can move the switch to either of the short positions, the "momentary" position usually being more convenient.

4. If your clothing or hair has a net charge, the electrometer reading may change if you move around. Hence, during a given measurement, change position as little as possible and ground yourself (e.g. touch a convenient ground) during a measurement. Making sure you torso is as far as conveniently possible from the measurement point may help as well. Note that grounding yourself is very often a *bad* idea when working with electronic devices that are energized because of the danger of electrocution. Be careful not to touch any voltage sources while you are grounded. The exception to this is when low-voltage electronic parts, i.e. many PC components, are removed from their socket because static discharge may damage the sensitive electronics. Hi-voltage capacitors (i.e., well above 5 V) that are not adequately discharged remain extremely dangerous even when removed from contact with power sources.
5. To remove all *net* charge from the cup, switch the electrometer momentarily to the SHORT position. (This connects the electrometer terminals to each other so that any charge flows from/to ground). If the meter does not read zero, notify your instructor.
6. Always discharge paddles and cup before starting an experiment. To test if an object is charged, put it into the cup and see whether the electrometer deflects. Conductors discharge easily by touching them to a grounded conductor. To discharge an insulator, you must create sufficient ions in the surrounding air. The insulator will then attract ions of the opposite charge until all virtually all charge is neutralized. An open flame is a simple source of ionized air; the ions in the flame convect upward with the hot gas. **To avoid damage to the insulator, keep it at least 10 cm above the flame**!

INTRODUCTION:

A capacitor consists of two electrodes separated by an insulator. An electrode is just a piece of metal that can be connected to a voltage or current source. The capacitance C is a number that quantifies how much charge Q is required to hold an electrode at a potential difference ΔV from a second electrode, $Q = C\Delta V$. The second electrode is usually either an electrode with opposite charge $(-Q)$ located some distance d away, or an imaginary surface at potential $V = 0$ located infinitely far away. In Part I you will study a parallel plate capacitor consisting of two circular metal plates separated by air. In Part II you will study simple circuits and the charging behavior of capacitors using conventional commercial capacitors. These are made from two long strips of aluminum foil separated from each other by a thin sheet of plastic, all rolled into a cylinder.

Modern supercapacitor far exceed the performance of ordinary thin film capacitors. New designs make use of novel materials such as carbon aerogel. These devices can exhibit well over 1000 times the capacitance of standard capacitors of equivalent volume. The capacitance of a supercapacitor the size of your finger can range upward of 50 F and be charged up to 5V (and thus hold 250 Coulombs). For comparison purposes the net energy density is 10% that of a nickel-metal hydrid battery.

Part I: THE PARALLEL PLATE CAPACITOR

EXPERIMENT A: Potential Difference *vs* Separation (for fixed charge)

INTRODUCTION:

For a fixed charge the voltage of a conductor, i.e., the potential difference between that conductor and ground, depends on what bodies are nearby. If you charge a parallel plate capacitor and then increase the plate spacing–leaving Q unchanged–you will find that the potential difference increases.

Q1.1: How do you reconcile this with the fact that $Q = CV$ remains constant? (Two good approaches are either using what you have learned about C, or using what you have learned about $\vec{E}$ for capacitors and the integral $\int \vec{E} \cdot d\vec{l}$).

Q1.2: **Preliminary calculation:** Assuming air has a dielectric constant $\kappa = 1$ estimate how many excess electrons exist on one plate of the capacitor in front of you when V is set to 15 V and the plates are separated by 0.5 cm.

EXPERIMENT A: Potential Difference *vs* Separation for Fixed Charge on a Capacitor

1. Referring to Figs. 1a and b, connect the electrometer across the capacitor, but use the special low capacitance lead and a separate ground instead of the shielded coaxial cable. Use the movable plate as the grounded one, and turn the apparatus so the fixed plate faces away from you. The ground removes any new excess charge that might accidentally come in contact with the plate, in order to keep the voltage the same. As a result, it provides some shielding of the system from charges on your hand or clothing. Also, with one plate at ground, you will only have to touch the other plate with the supply in order to charge the capacitor in step 2 below.

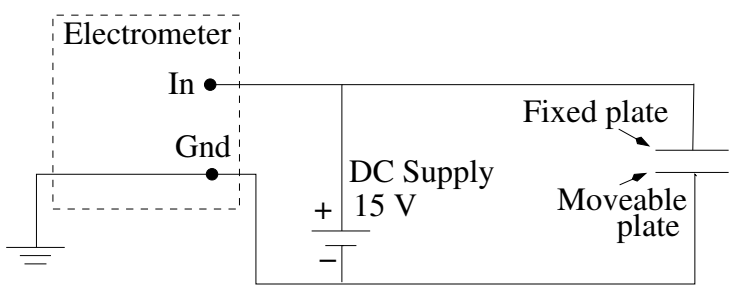

Figure 1a: Setting the supply and charging the plate

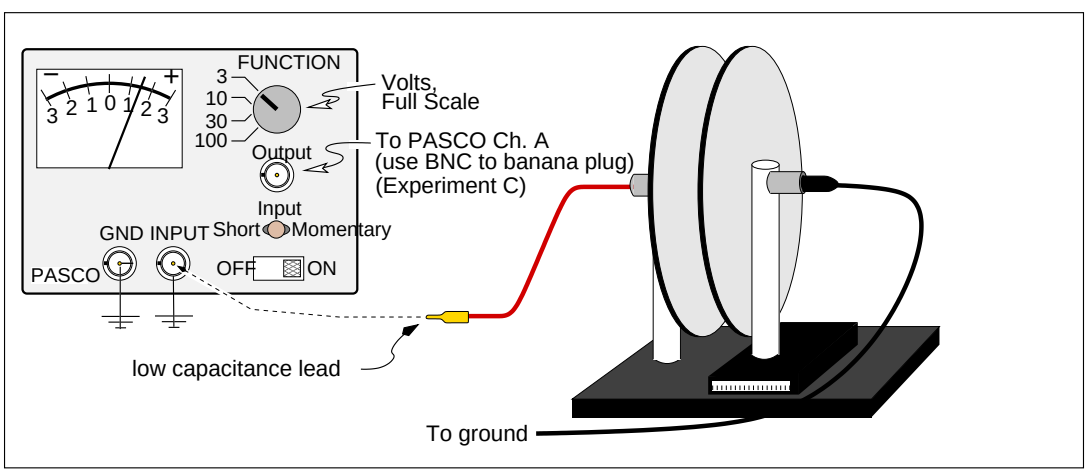

Figure 1b: Reading the voltage

2. Start with an initial plate separation of $d = 0.5\,\text{cm}$. This is large enough to keep charge from leaking across the spacers on dry days. Use the 30 V scale and output of the PASCO DC power supply. Connect the negative terminal to the ground terminal of the electrometer. (*Standby switch must be in proper position or no voltage results even though meter reads).* Set the output of the DC power supply to 15 Volts using the Electrometer (not the meter on the supply; it is not as accurate. Watch out, the Electrometer can acquire and keep a voltage bias because of its very high input impedance...how do you avoid this before setting the supply output?) Charge the capacitor to 15 V by touching the appropriate plate with the positive voltage supply lead.

   Now change the plate spacing and observe the change of the voltage across the capacitor. Record your qualitative answer in your lab book, and then record readings from the electrometer meter of the voltage for different plate spacings. At large spacings, the capacitance is very sensitive to external effects, so take more data at small distances. Span 10 cm in your measurements. (Of course, *zero* on the cm scale will *not* be zero separation). Devise and report a way to make sure no charge has leaked off or been acquired by the plates during your measurements.

   NOTE: In dry weather stray static charge on your body can adversely affect the charge on the parallel plate capacitor. Keep body movement to a *minimum*. There is an optional shielding screen which you may place in front of your body to minimize this effect. In addition there is an optional extension handle that attaches to the moving plate which will increase your arm to plate distance.

   In humid weather the charge may leak too rapidly off the plate to get reasonable results. Use the heat gun to *gently* warm up the parallel plate capacitor and eliminate some moisture.

3. ANALYSIS:
   Plot the voltage on the capacitor V vs. the distance d between the plates using Excel.

Q 1.3 Which parts of the plot are most consistent with the model of a parallel plate capacitor, and which are not?

Q 1.4 What is the meaning of the x-intercept?

Q 1.5 Fit a straight line to the part of your graph that is consistent, and use the slope to estimate the charge on the capacitor. Is the charge larger or smaller than expected?

Q 1.6 Explain the deviation from ideal behavior.

Now, create two new columns from your existing data by making a column of 1/V and a column of $1/(d - d_0)$. Plot $1/V$ vs. $1/(d - d_0)$. Do you see a straight line?

Q1.7 This formula will pass through the origin when d gets large [$1/(d - d_0)$ goes to zero]. What do you think is causing your data *not* to go through the origin? (Hint: if the capacitance of your cables is important, then it adds in parallel to the capacitance of the plates: C(plates) + C(cables) = Q/V.)

Q1.8 Why do we want the lead to have low capactiance?

EXPERIMENT B: (OPTIONAL after completing PART II)

Surface Charge Distribution on a Parallel Plate Capacitor
(at fixed Potential Difference)

SUGGESTIONS:

1. Ground yourself, the electrometer and the movable plate of the capacitor. Turn the parallel plate capacitor so that you are behind the movable plate. Set up electrometer and cup as in **E1** but not close to the capacitor. (Why?)

2. *Connect 500 volts to the fixed plate.* Do NOT apply this voltage to electrometer directly.

3. Use the aluminum paddle (as in experiment **E1**) to probe the charge density on the capacitor's surfaces, and then use the electrometer and cup to measure the charge on the paddle. To avoid spurious effects from charges on the paddle's handle, touch the paddle to the bottom inside of the cup and remove the paddle before taking the reading.

4. Record the relative charge density (sign and magnitude) on both the inner and outer surfaces of the two plates for three radial positions: center, halfway out, near edge of plate. Use plate separations of 2.5, 5, and 10 cm.

QUESTIONS for Experiment B:

1. Why are measurements for separations < 2.5 cm not very meaningful?

2. How does relative charge density, σ, inside and outside the capacitor depend on plate spacing? On distance from center of the plate? Explain.

EXPERIMENT C: (OPTIONAL)

For a fixed spot inside the capacitor, find how σ varies with voltage.

Part II:
CAPACITORS IN PARALLEL, IN SERIES, AND CONNECTED TO RESISTORS

SUGGESTIONS:

1. *Use the electrometer to test voltages in Part II: A and B experiments*–**review the Electrometer Precautions under the apparatus section at the beginning of the lab!**. Use the lucite circuit board containing different capacitors and resistors. Although a push-button switch (plus connectors) permits applying 30 V momentarily to any capacitor, you may prefer just to touch the voltage supply leads directly to the capacitor being charged.

EXPERIMENT A: CAPACITORS IN SERIES

1. Discharge all capacitors first by momentarily shorting leads with a banana plug connector.
2. Connect 20 V across two capacitors in SERIES as the circuit and schematic at shows. (The schematic is only a *suggested* configuration.)
3. Calculate the potential difference expected across each capacitor.
4. Disconnect the DC supply from circuit.
5. Now measure the voltage across the individual capacitors.

   OPTIONAL: If that's too easy, try this: charge $C_1 = 0.5\,\mu$F to 30 V; discharge $C_2 = 1.0\,\mu$F and *then* connect 10 V across $C_1 + C_2$. Now measure the voltage across C_1 and across C_2. Is this consistent with the idea of charge conservation in the region between the two capacitors?

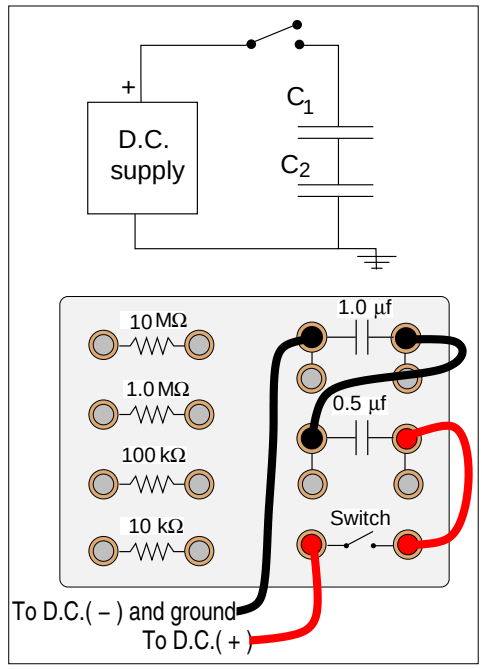

EXPERIMENT B: CAPACITORS IN PARALLEL

1. Discharge $C_2 = 1.0\,\mu$F and remove from circuit.
2. Charge $C_1 = 0.5$ F to 20 V and then disconnect the D.C. supply.
3. Measure voltage on C_1.
4. Connect C_2 in PARALLEL to C_1 and measure the final voltage across the capacitors (with the supply still disconnected.)
5. Calculate the voltage you would expect.

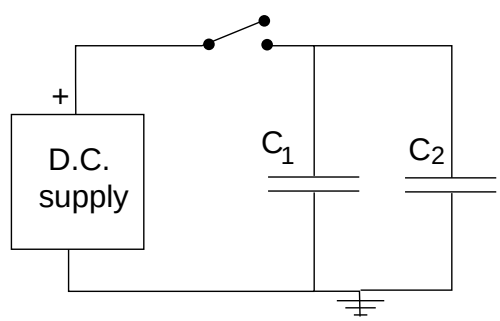

EXPERIMENT C: DISCHARGING OF CAPACITOR THROUGH A RESISTOR

In this experiment you will use the electroscope and computer interface to observe the discharging of a capacitor through a resistor. So far you have only observed the "steady state" or DC behavior of capacitors. Now you will charge the capacitor to a given voltage and then remove the voltage supply. Because the two plates of the capacitor are actually connected through the resistor, the charge on the capacitor will "drain," or move to the opposite plate through the resistor. You will measure the voltage drop across the capacitor, which tells you the amount of charge Q remaining on the capacitor. This is related to the flow of charge, or current I by the following relations as a function of time t during the discharge:

$$\frac{V(t)}{R} = I = -\frac{dQ(t)}{dt} \quad \text{and} \quad Q(t) = CV(t).$$

Solving the above equation gives the relation: $V = V_0 e^{-t/\tau}$ where $\tau \equiv RC$ is the *time constant* for a particular circuit. R is the value of the resistor, which is measured in Ohms, or Ω. Note that the input resistance of the Electrometer is much larger than the values of R you will be using, so the charge flow into the electrometer is negligable.

SUGGESTED PROCEDURE:

1. Connect the $10^7\ \Omega$ resistor (marked as 10 $Mohm$ or 10 MΩ) across the large capacitor (1.0 μF) and set up the electrometer to measure the voltage on the capacitor. Fig. 4 shows the nominal circuit configuration and a possible wiring diagram for the circuit. Depressing the switch connects the power supply to the circuit, which will rapidly charge the capacitor, and releasing the switch will initiate the discharge.

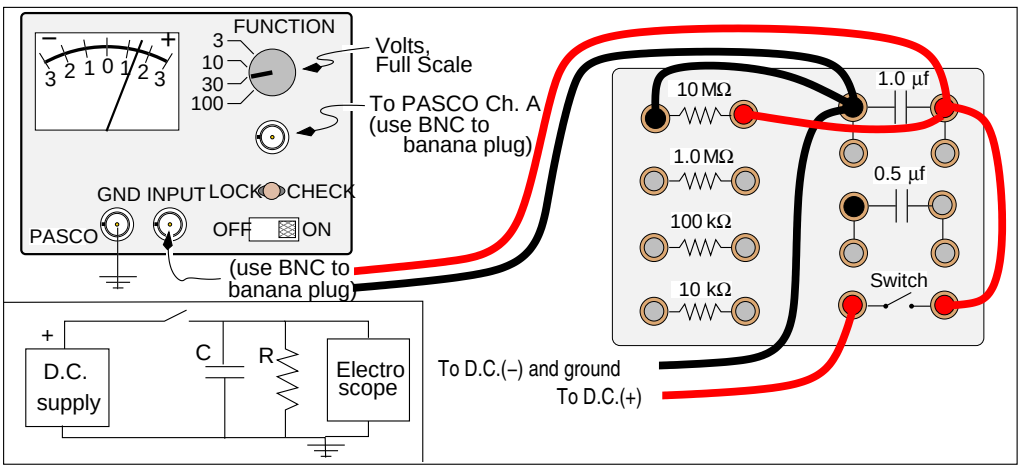

Figure 4: The resistor and capacitor are connected in parallel.

2. Connect 30 V across the capacitor and observe the voltage V_C on the capacitor as a function of time after you disconnect the 30 volts and switch in the resistance R. Qualitatively describe the discharge behavior observed by watching electrometer display.
3. After making sure the PASCO interface is connected to the electrometer output (through Channel A), CLICK on the "Launch RC III" icon below to initiate the DataStudio interface software. There should be a panel, a table and a graphing display for V *vs* t.
4. CLICK the START icon, charge the capacitor, and record data while the capacitor is discharging. CLICK on the STOP icon. Print out one copy of the table or transfer it to Microsoft Excel and the print a copy. If time permits, and you are able to manage it, specify a region of interest and fit the data to the equation given for the discharge of the capacitor. You may need to use $V = V_0 \exp^{-(t-t_0)/\tau}$ in order to compensate for the time offset t_0.
5. Move the leads to the 1 $M\Omega$ resistor and repeat the experiment. (Configure the interface to show multiple data sets.)
6. Move the leads to the 100 $k\Omega$ resistor and repeat the experiment.

QUESTIONS:

1. Do the curves have the expected functional behavior?
2. By moving the curser over the inital voltage and time, and then over the voltage at $1/e$ of the inital value, compare the nominal product $R \times C$ to the time required for the voltage to drop to $1/e$ of the initial value ($e = 2.72\ldots$). You may need to adjust the sampling rate to check this for the 100 kΩ resistor.

E-4 Electron Charge to Mass Ratio

OBJECTIVES:

To observe magnetic deflection of electrons, at fixed energy, in a uniform magnetic field and then use this information to obtain e/m, the electron charge/mass ratio.

APPARATUS:

Figure 1: Foreground: dip-needle magnetic-field sensor sitting on power supplies with built-in digital meters; Background: Sargent-Welch e/m equipment and black cardboard.

INTRODUCTION

Your e/m vacuum tube contains a number of features for producing and visualizing a thin uniform electron beam. Refer to Figs. 2 & 3 for schematic detais. Passing current through a wire filament (F) causes it to become hot and if the hot filament is in close proximity to a higher potential electrical element (the anode C) some of the electrons will accelerate through the vacuum towards the anode. To allow a narrow beam of electron to leave the vacinity of the anode a thin slit, S, has been cut in the anode cylinder.

Normally the electron beam is invisible to your eye. However the e/m tube also contains a saturated vapor pressure of Hg. When electrons, with energies in excess of 10.4 eV collide with Hg atoms, some atoms become ionized and some become excited. (These electrons are, of course, now permenently lost from the beam). Most of the Hg atoms/ions quickly recombine and/or de-excite to emit a bluish light before moving appreciably from the collision center. Hence the bluish light marks the path taken by the electron beam.

The potential difference V between the filament and anode (Fig. 2 and 3) accelerates electrons thermionically emitted by the filament. Those electrons travelling toward the slit S emerge with a velocity v given by

$$Ve = \frac{1}{2}mv^2 \tag{1}$$

provided that the thermal energy at emission is small compared to Ve.

Preliminary Questions:

1. What is purpose of the Helmholtz coil (read through the appropriate section first)?
2. What aspect of the electron trajectory will indicate that it is undergoing uniform circular motion?

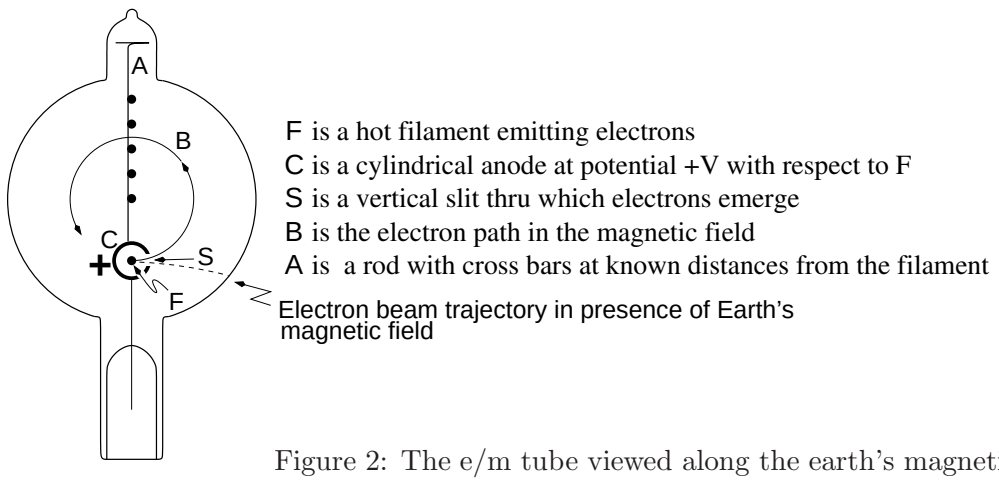

Figure 2: The e/m tube viewed along the earth's magnetic field (i.e., B_{earth} is perpendicular to the page).

Figure 3: Side view of Figure 2.

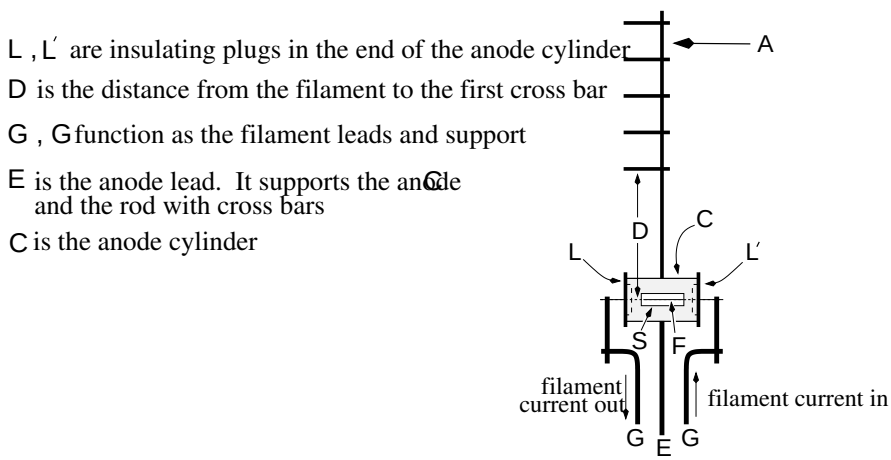

If the tube is properly oriented, the velocity of the emerging electrons is perpendicular to the magnetic field. Hence the magnetic force vector $\vec{F}$, which is described as a cross product $\vec{F} = e\,(\vec{v} \times \vec{B})$, supplies the centripetal force $\frac{mv^2}{r}$ for a circular path of radius r. Since $\vec{v}$ is perpendicular to $\vec{B}$

$$evB = \frac{mv^2}{r} \tag{2}$$

Eliminating v between (1) and (2) gives

$$e/m = \frac{2V}{B^2 r^2} \tag{3}$$

Our digital voltmeter measures accurately the accelerating voltage V. The radius of curvature, r or $D/2$, is half the distance between the filament F and one of the cross bars attached to rod A. The cross bar positions are as follows:

Crossbar No.	Distance to Filament	Radius of Beam Path
1	0.065 meter	0.0325 m
2	0.078 meter	0.039 m
3	0.090 meter	0.045 m
4	0.103 meter	0.0515 m
5	0.115 meter	0.0575 m

To find e/m we still need to know the magnetic field strength B. Instead of measuring B, we calculate it from the dimensions of the Helmholtz coils and the measured coil current, I, needed to bend the beam so that it hits a given cross bar.

Helmholtz coils consist of two identical coaxial coils which are separated as in Fig. 4 by a distance R equal to the radius of either coil. They are useful because near the center ($X = R/2$) the field is nearly uniform over a large volume. (Most textbooks assign this proof as a problem. Hint: Find how dB/dX changes with X for a single coil at $X = R/2$, etc.)

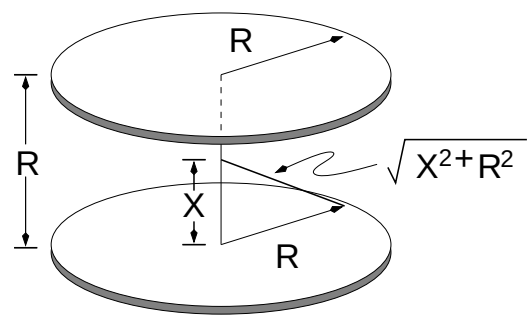

Figure 4: Helmholtz coil geometry.

The field at $X = R/2$ is in fact: [2]

$$B = \frac{8}{\sqrt{125}} \left(\frac{N\mu_0 I}{R} \right) \text{teslas} \tag{4}$$

as one easily sees by adding the axial fields $B(x)$ from each of the single coils:

$$B(X) = \frac{N\mu_0 I R^2}{2\,[R^2 \;+\; X^2]^{3/2}}.$$

Thus when X = R/2, then

$$B \;=\; 2B(X) \;=\; \frac{N\mu_0 I^2 R^2}{[R^2 \;+\; R^2/4]^{3/2}} \;=\; \frac{N\mu_0 I}{R\;\left[\frac{5}{4}\right]^{3/2}} \;=\; \frac{8}{\sqrt{125}} \left(\frac{N\mu_0 I}{R} \right).$$

In Eqn. 4,

N = number of turns on each coil (72 for these coils)
I = current through each coil in amperes
R = mean radius of the coils in meters (approximately 0.33 m but varies slightly from unit to unit)
μ_0 = $4\pi \times\ 10^{-7}$ tesla meter/ampere.

[2] The actual B at the maximum electron orbit is only $\sim 0.5\%$ less. See Price, "Electron trajectory in an e/m experiment", *Am. J. Phys.* **55**, 18, (1987)

Finally if we substitute (4) into (3) we obtain

$$e/m \;=\; \left(2.47 \;\times\; 10^{12}\,\frac{R^2}{N^2}\right)\frac{V}{I^2 r^2} \;\; \text{coulombs/kg}\;. \tag{5}$$

CIRCUIT DIAGRAM: Fig. 5 should help you hook up the components. The current must have the same direction in both sets of Helmholtz coils.

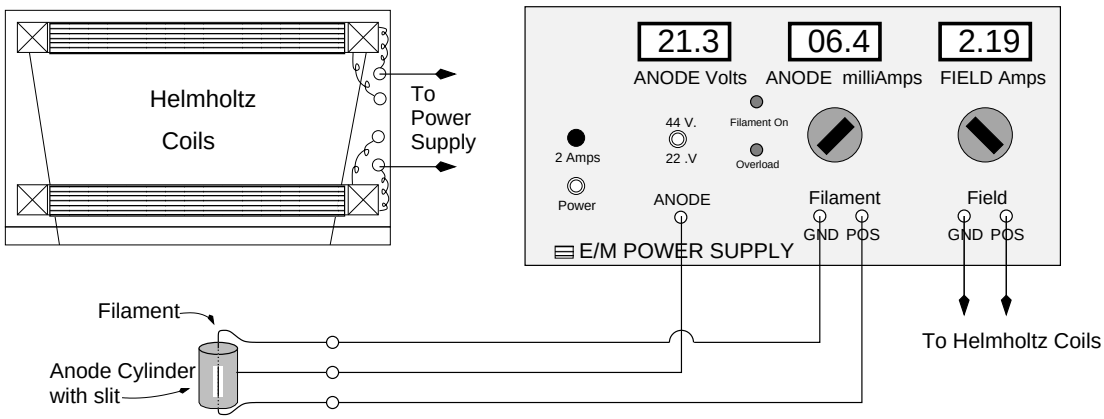

Figure 5: Basic wiring layout.

SUGGESTIONED PROCEDURE:

1. Set the axis of the Helmholtz coils along the local direction of the earth's field, B_e, as determined with a compass and dip needle. The axis should point towards the geographic north but at an angle about 60 degrees from the horizontal. Thus the axis should point deep under Canada. Put the long axis of the e/m tube in the north-south direction and with the cross bars up.

   CAUTION: Nearby ferromagnetic material (e.g. steel in the power supply, the table and in the walls) can alter the local direction of B_e. As long as the field direction does not change during the experiment, there should be no problem.

2. Set the filament supply knob to zero before turning the power on. A red light comes on when excessive filament current or a too rapid increase trips a protective relay. Reset by putting the filament control to zero and slowly turning it up.

3. Since e/m depends on V/I^2, one needs high quality meters for V and I. Our digital meters have an accuracy of $\pm$ one digit in the last displayed digit.

4. Start with $\sim 22\ V$ between filament and anode. With the room dark, *gradually* turn up the filament control until the beam is visible. To make the beam more visible use black cloth and black cardboard to block out stray light: place the black cardboard **inside** the Helmholtz coils and view from the top. If the protection circuit trips and a red light comes on, reset by zeroing the filament control; then turn it up **slowly**. When the beam appears, adjust the filament control to give 5-10 mA of anode current. **Do not exceed 15 mA!** With no current through the Helmholtz coils, the earth's magnetic field should slightly curve the beam (like the dotted line in Fig. 2.)

5. *Correction for the earth's magnetic field:* Increase I through the Helmholtz coils until the beam deflects. If the sense of deflection is the same as that from the earth's field (i.e. when $I = 0$), reverse the leads to the Helmholtz coils; the curvature should then be like B in Fig. 2. The field from the coils then opposes the earth's field; hence adjust the coil current until the beam path is straight. Since light travels in straight lines, the beam should then hit the glass at the center of the area illuminated by light from the filament.

   This field current which just cancels the earth's field, we will call I_e. Clearly the I for Eqn. 5 must have I_e subtracted: Let the correct field current for crossbar n be I_n, and let I'_n be the measured current to bend the beam around so that the outside sharp edge of the beam hits the center of the nth crossbar. Hence $I_n = I'_n$ - I_e is the correct current to bend the beam to the appropriate radius, r_n.

MORE ACCURATE METHODS TO ELIMINATE THE EFFECT OF THE EARTH'S FIELD:

Uncertainty in I_e can dominate the uncertainty in e/m, so consider using the following more accurate methods to eliminate the effect of the earth's field:

i. Take two readings of coil currents at $n = 3$, I'_3 and I''_3: one with the earth's field opposing that of the Helmholtz coils, the other with it aiding. To accomplish this, first (with the cross bars up) measure I'_3 (as described above); then rotate just the e/m tube 180° about its *long* axis.

CAUTION: Always rotate the tube in the sense to *REDUCE* the *TWIST* in the filament and anode leads. *Otherwise one can twist the leads off.*

   Next reverse the current in the Helmholtz coil and adjust it so that the beam again hits the same cross bar. Call this reading I''_3. Then

$$I'_3 - I''_3 = 2I_e.$$

ii. Or better yet, for each cross bar record an I'_n and I''_n reading. The average

$$\frac{I'_n + I''_n}{2} = I_n$$

   is the current required if the earth's field were absent. You may find it easier to measure I'_n for $n = 1$ to 5 and then rotate the e/m tube just once to measure I''_n.

MEASUREMENTS AND ANALYSIS: (If time is short, measure only two cross bars at each voltage.)

1. Make two determinations of e/m for each cross bar.

2. Repeat for an accelerating voltage of ~ 44 volts. (Note I_e should remain the same and one can measure it more precisely at the lower accelerating voltage.)

   SUGGESTED DATA TABULATION: {If you use the alternative method (ii. above), replace I_e by I''_n and $I_n = I'_n - I_e$ by $I_n = \frac{1}{2}(I'_n + I''_n)$.}

Volts	bar	radius	I_e	I'_n	$I_n = I'_n - I_e$	e/m

3. Estimate the reliability of your value of e/m and compare to 1.76×10^{11} C/kg.

OPTIONAL:

Note that the electron beam expands in a fan shape after leaving the slit. Interchange the filament leads and note how the fan shape flips to the other side of the beam.

Explanation: The fan shape deflection arises from the filament current's magnetic field acting on the beam. Our filament supply purposely uses unfiltered half wave rectification of 60 Hz AC so that for half of the cycle no current flows thru the filament but which is still hot enough to emit sufficient electrons. The electrons emitted in this half cycle constitute the sharp beam edge which we use for measurement purposes. This trick not only avoids deflection effects for this part of the beam, but also avoids the uncertainty in electron energy arising from electrons being emitted from points of different potential along the filament. (During this half cycle of no filament current the filament is $\sim$ an equipotential.) The fan shape deflection relates to electrons emitted during the other half cycle when filament current flows. [See: F.C. Peterson, *Am. J. Phys.* **51**, 320, (1983)]

EC-5 Magnetism

EC-5a Lenz's Law

OBJECTIVES:

1. To observe the eddy currents induced by the magnetic field in a moving conductor.
2. To follow how the eddy current intensity depends on the shape of the conductor.

> *YOU NEED TO KNOW:* You must understand and be able to use the Right Hand Rule in order to determine the direction and sense of the forces involved.

APPARATUS:

A Permanent Magnet; four different paddle pendulums; two small red and green magnets. (There is only a single one of these set-ups per room and so, if it is in use, proceed to the next section first.)

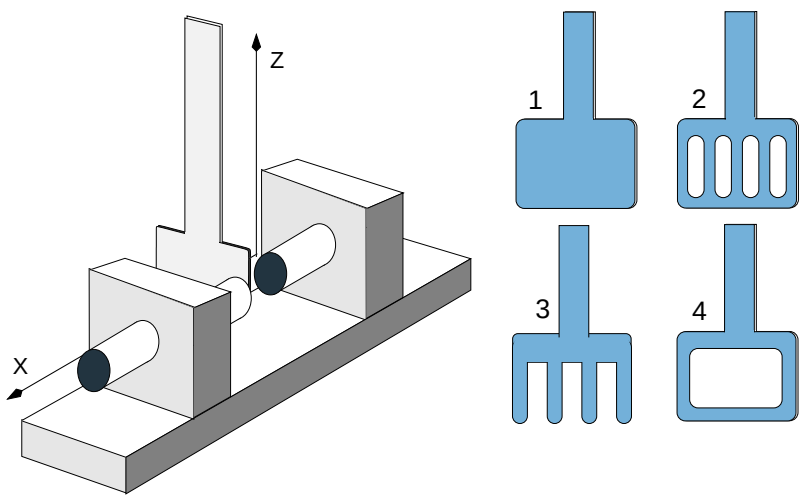

Figure 1: The magnet and the paddle pendulum.

PROCEDURE I: (10 min)

1. Using one of the small magnets determine the direction of the magnetic field between the jaws of the permanent magnet.
2. Observe and describe the behavior of the four pendulums when dropped between the jaws of the permanent magnet.
3. Reverse the magnet. Observe and describe the behavior of two pendulums when dropped between the jaws of the permanent magnet.
4. Set pendulum #1 between the jaws of the magnet. Move the magnet rapidly in a direction parallel to the pendulum plate (i.e. *without touching* jaws). Describe what happens.

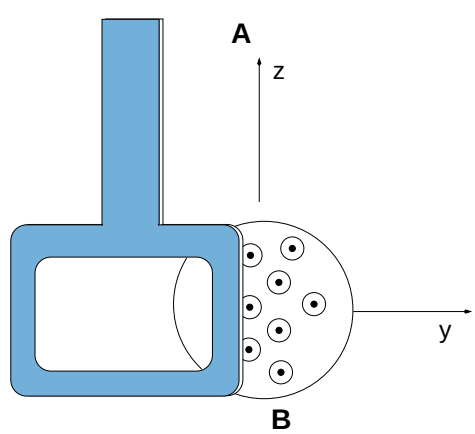

Figure 2: Paddle moves in the $+y$ direction

QUESTIONS:

Q1: Use the right hand rule to determine the motion of electrons at the moment when pendulum # 4 enters the magnetic field region. Is it from A to B? Or from B to A?

Q2: What is the direction of the current flowing in the pendulum? Is it from A to B? Or from B to A?

Q3: Use the right hand rule to determine the direction of the force exerted on the current that flows in the arm of the pendulum by the magnetic field. Is it along the positive or the negative y axis?

EC-5b Induction - Dropping Magnet

OBJECTIVE:

To show that a moving magnet induces an *emf* within a coil of wire.

INTRODUCTION:

After discovering the phenomenon of induction using two coils wrapped around an iron ring, Faraday was able to show that plunging a magnet into a coil of wire also generated a momentary induced current. Faraday did not use the concept of *Changing Flux* instead he thought of the *'lines of force'*, and concluded that when these lines move across a wire an *emf* is induced. Can you see the correspondence of this concept with the concept of flux? Think about this.

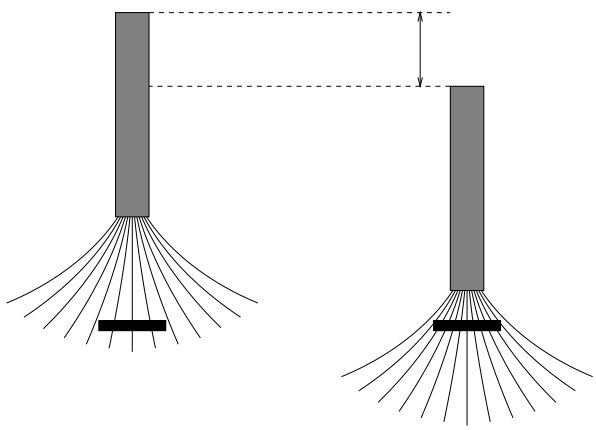

Figure 3: A moving magnet - lines move across a wire

EXPERIMENT:

You will be repeating Faraday's experiment by observing the *emf* induced in a coil by a fast moving magnet, and you will check that the *emf* you observe obeys the 'right hand rule'. If you have the time you can see the effect of changing the speed and the polarity of the magnet.

YOU NEED TO KNOW: Lenz's Law and the use of the right hand rule. A varying magnetic field induces a current that opposes the magnetic field change.

EQUIPMENT:

- PC, PASCO interface and power amplifier module.
- A voltage sensor is connected to the coil and to port A of the interface. Be sure the red wire is connected to the top of the coil. In this way a positive voltage corresponds to a current in the direction of the arrow on the top of the coil.
- A stand holding a plastic tube and a coil.
- A long bar magnet, this magnet has a small cut at one end, that is the North pole.
- A pair of red and green bar magnets

> PRECAUTIONS: The long bar magnet is very fragile! DO NOT DROP IT ON THE FLOOR!
> In addition do not move the pair of red and green magnets any where near the permanent magnet used in EC-5a as this may flip the polarity (North-South) of these magnets.

PROCEDURE I: (15 min)

1. Click on the Launch EC-5b icon below (web version) to initiate the PASCO software window.
2. Set the distance $d_1 \sim 15\ cm$ between the top of the plastic tube and the top of the coil. Record this in your lab notebook. Be sure that the red terminal of the voltage sensor is plugged on the top plug of the coil.
3. The long bar magnet has a narrow cut at one end, this is the North pole of the magnet.
4. Hold the long bar magnet at the top of the tube; the end with the cut should be down, and just one centimeter or so inside the tube.
5. CLICK on the START icon and drop the magnet immediately afterwards.
6. to see the whole graph, and measure the heights h_1 and h_2 of the two peaks using the cursor cross-hairs [see PASCO Interface and Computer Primer section (Appendix F.)].
7. Slide the tube upwards, remove the rubber stopper and the magnet, replace the rubber stopper at the bottom of the plastic tube, and slide the tube down again.
8. Print the graph on printer.

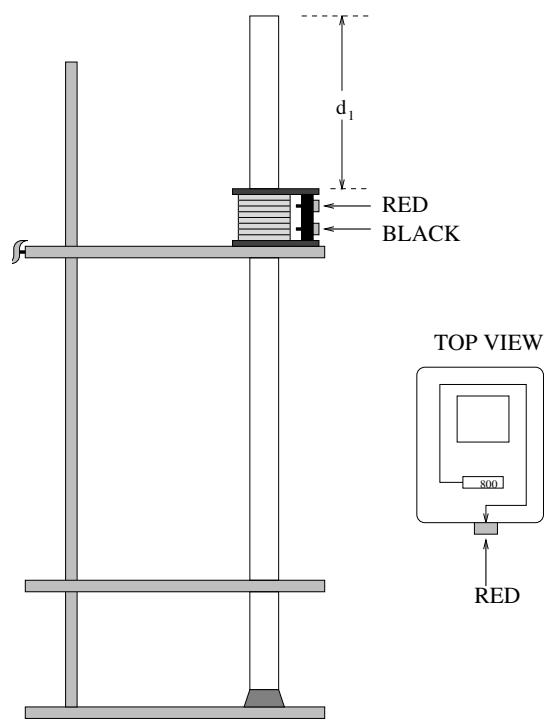

Figure 4: The setup

QUESTIONS: (10 min)

Q1: The graph you obtained has a fall, a rise, a very short flat part, then a rise and finally a fall. Explain what is happening at these various times.

Q2: Explain why the two voltage peaks you measured in 1.6 are not the same size. Can you give an approximately quantitative justification for the ratio h_1/h_2?

Q3: Examine the direction of the winding in the coil; verify that the directions of the peaks is what you would expect using the right hand rule (curled fingers = current; thumb = magnetic field).

PROCEDURE II: (10 min)

Repeat procedure I with the magnet inverted (the South Pole at the bottom).

QUESTION:

Q1 Explain in what way(s) and why the new graph is different.

PROCEDURE III: (20 min)

1. Move the coil further down on the tube making the new distance d_2 at least about two and a half times larger than d_1. Record this new distance d_2.
2. Repeat procedure I. Measure and record the heights h_1' and h_2' of the new peaks.

QUESTIONS:

Q1 Explain the reason for the difference between this graph, and the one obtained in procedure I.

Q2 Can you give an approximate quantitative explanation for the ratio h_1'/h_1? HINT: remember Newtonian mechanics formula for free fall $v = \sqrt{2gh}$ where g is the acceleration due to gravity .

EC-5c Induction - Test Coil

OBJECTIVES:

1. To observe the *emf* induced in a small detecting coil by the varying magnetic field produced by the varying current in a separate large coil.
2. To follow how how this *emf* depends on the shape, and the frequency of the inducing current. The computer will produce a voltage varying with time in the form of a triangular waveform with amplitude $V_{max} = 3\ V$ and a frequency $f = 10\ Hz$.

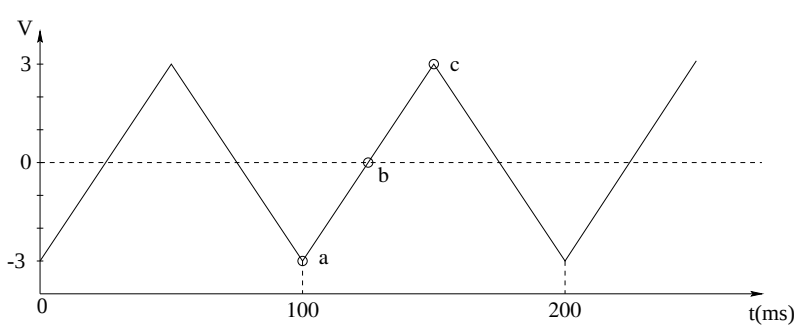

Figure 5: The triangular waveform

INTRODUCTION:

1. The applied voltage varies linearly from $V_{min} = -3\ V$ to $V_{max} = 3\ V$ in 50 ms. The *slope* of the voltage curve is therefore $\Delta V/\Delta t = 120\ V/s$.
   The resistance of the large coil is $R \simeq 7\Omega$ so current flowing in the large coil will vary linearly from $I_{min} = -3/7 = -0.43\ A$ to $I_{max} = 3/7 = +0.43\ A$ in 50 ms, Correspondingly $\Delta I/\Delta t = 17.2\ A/s$. The strength of the magnetic field produced by the large coil is proportional the the voltage applied on it, and therefore the rate of change $\Delta B/\Delta t$ is proportional to the *slope* of the curve that shows the voltage versus time.

YOU NEED TO KNOW: The *emf* induced in a coil is then $\mathcal{E} = -NA\Delta B/\Delta t$ where N is the number of turns in the small coil and A its cross-sectional area.

EQUIPMENT:

- PC and PASCO CI-750 interface.
- Power amplifier module.
- A stand holding a small detecting coil.
- Two large back-to-back coils with an ohmic resistance $R = 7\Omega$. The radius of the coil pair is $r = 0.1$ m. The *output* signal from the PASCO goes to the *input* of the Power Amp and then the output from the Power Amp goes to the large coil (using the RED and BLACK banana jacks).

PROCEDURE I: (10 min)

1. Click on the Launch EC-5c icon below (web version) to initiate PASCO software window. The monitor should now show a scope window and a window for the control of the signal generator. If necessary set the frequency to 10 Hz and the pull down menu to choose the triangular (or sawtooth) waveform. In the oscilloscope window set the trigger level to 1 V.
2. If necessary adjust the signal generator amplitude to 3 V.
3. Analog channels A and B are used to sense the voltage drop across the large coil (A) and the voltage induced in the small coil (B). Connect the banana jack wires RED to RED and BLACK to BLACK..
4. Turn on the signal generator by CLICKing on the ON button then initiate data acquisiton by CLICKing on the START icon. You should now see the voltage induced in the small coil together with the one applied to the large coil.
5. Adjust the size of the waves you see in the scope window using the size controls on the side of the scope window, then measure the height h_1 of the square wave using the cursor [see PASCO Interface and Computer Primer section (Appendix F.)]. Record this height.

   QUESTIONS

   (a) Explain why the induced voltage is a square wave.
   (b) Observe the direction of the winding in the large coil. What is the direction of the magnetic field during the rising part of the triangular wave? Explain your thoughts.

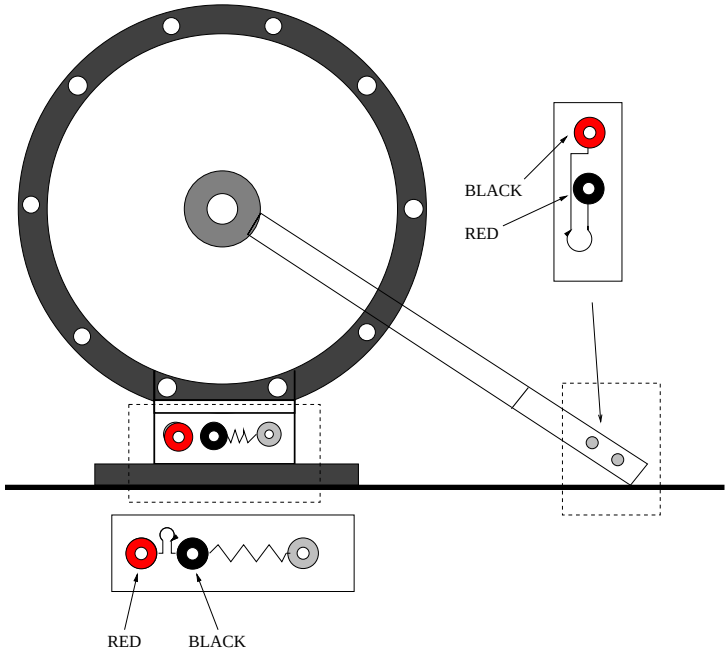

Figure 6: The layout with the Pasco CI and back-to-back coil assembly.

(c) Observe the direction of the winding in the small coil. What is the direction of the induced *emf* during the rising part of the triangular wave? Explain your thoughts.

PROCEDURE II:

Move the small detecting coil 5 centimeters away from the large coil, measure the amplitude of the induced voltage. Repeat at distances of 10 and 20 centimeters. Make a simple graph using Microsoft Excel or any other suitable application.

QUESTION

How does the strength of the magnetic field depend on distance? $\sim 1/r$?$\sim 1/r^2$? $\sim 1/r^3$?

PROCEDURE III:

1. Replace the detecting coil to its original position at the center of the large coil. Decrease the amplitude of the triangular wave to 2 V.
2. Measure the height of the square wave and record this value.

QUESTIONS

Q1: Did the slope of the triangular wave change? By how much?
Q2: Is the change in amplitude of the square wave what you would expect? Why?

PROCEDURE IV:

1. Repeat procedure III with a frequency of 15 Hz.
2. Compare the result with those of procedure I and III

PROCEDURE V:

1. Loosen slightly the clamp holding the small coil; rotate the coil 90° so that it is in the horizontal plane. Observe the resulting induced voltage.
2. Rotate the coil another 90° so that it is in the vertical plane again. Observe the resulting induced voltage. Compare the result with procedure III.

EC-5d Induction - Faraday Discovery

INTRODUCTION:

Michael Faraday (1791-1867) was a bookbinder journeyman (English for apprentice). He read some of the books he was supposed to bind, and became interested in 'natural philosophy' (the term science did not exist in the XVIIIth century).
In 1813 he applied for a job as a technician in the laboratories of the Royal Laboratories to professor Davy, he got the job. Some people say that this was the greatest discovery Davy ever made! He worked all his life in the laboratories, starting as a technician, became Director of the Laboratories, was elected to The Royal Society of London, and became a Professor at the Royal Institution. Some of you will be pleased to know that he knew no math, and never used math in his researches.

Faraday performed many kinds of experiments, in chemistry, optics, and metallurgy, but perhaps the most important experiments were on electricity and magnetism. Having learned of Oersted's experiments on the magnetic fields produced by an electric current, he wondered if the reverse could be true: perhaps magnetic fields could in turn produce an electric current. His first experiments were unsuccessful, until he realized that it was the *change* in magnetic field that produced a *momentary* current.

His first experiments were similar to the one you will be doing today: two separate coils were wound on an iron ring, the current in the primary coil was interrupted, and the momentary current in the secondary was observed.

The explanation of this effect is, as you know, that the change in current in the primary circuit produces a change in the magnetic field that exists inside the secondary coil, the electromotive force in the induced secondary is then

$$\mathcal{E} = -AN \cdot (\Delta B/\Delta t)$$

where N is the number of turns, and A is the cross-sectional area of the secondary coil.

OBJECTIVES:

To observe the induced momentary *emf* that appears in a secondary circuit when the current in the primary circuit is turned on, or interrupted. This is the original Faraday discovery: induction of a current by a varying magnetic field.

In procedure II you will observe that induced momentary emf appears also in the primary circuit itself when the current is turned on, or interrupted; you will be observing the self induction of a coil. Faraday used a switch to interrupt or start the current as shown in Fig 1; you will use the computer to do the same job: the computer will produce a square wave, the voltage will change abruptly from 0 volts (current off = switch open) to a value of about 4 Volts (current on = switch closed) as shown below.

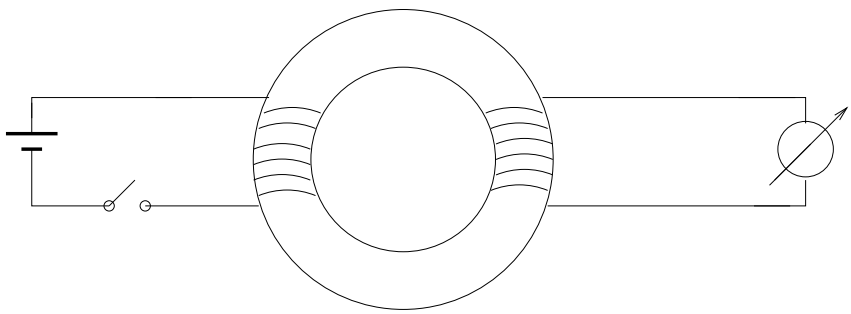

Figure 7: Faraday's experiment

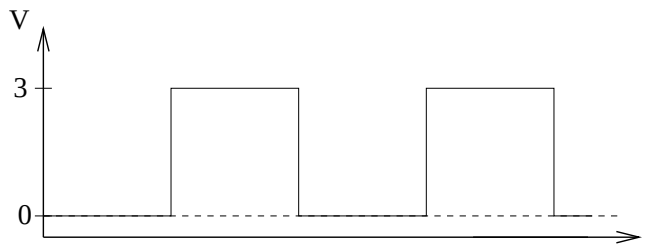

Figure 8: The square wave

EQUIPMENT:

- PC and PASCO CI-750 interface, again with Output connect to the power amplifier input.
- Two voltage sensors are plugged in the interface. The voltage sensor plugged in the A port measures the voltage across the external resistor; the voltage sensor plugged in the B port measures the voltage across the coil.
- Computer controlled Power Amplifier Module.
- A pair of nested coils. The outer one is the 'primary'. It has about 2600 turns of fine wire and has a resistance of $\sim$ 95 Ω. The primary coil is insulated from the inner secondary coil, an iron bar fits inside the inner coil.
- A plug board and a 100 Ω resistor.

PROCEDURE I:

1. Click on the Launch EC-7d icon below (web version) to initiate the PASCO DataStudio software window.
2. Check that the power amplifier is on, (the yellow pilot light labeled 'Power' should be on and the red pilot light light labeled 'Distorting' on the power amplifier should off).
3. Check that the amplitude is $\sim$ 4 Volts, and the frequency is $\sim$ 10 Hz. CLICK on the ON button of the Signal Generator, then CLICK on START icon. The CLICK on STOP after a second or so.
4. The computer monitor should now display two curves:
   - one curve (curve A) looks like a square wave, but not quite; it shows the voltage across the external 100 Ω resistor, and therefore tells you the current flowing in the coil.
   -the other curve (curve B) shows the induced voltage across the secondary coil

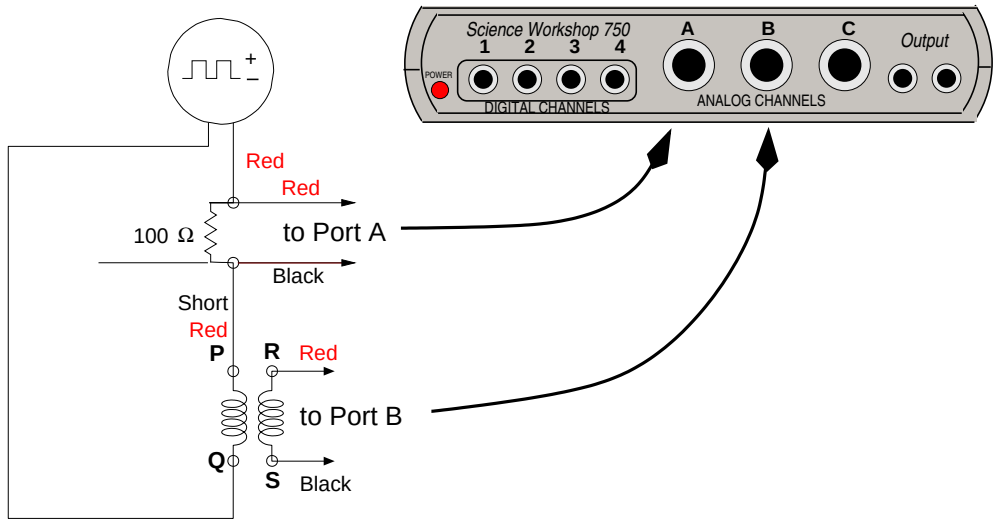

Figure 9: The schematic setup

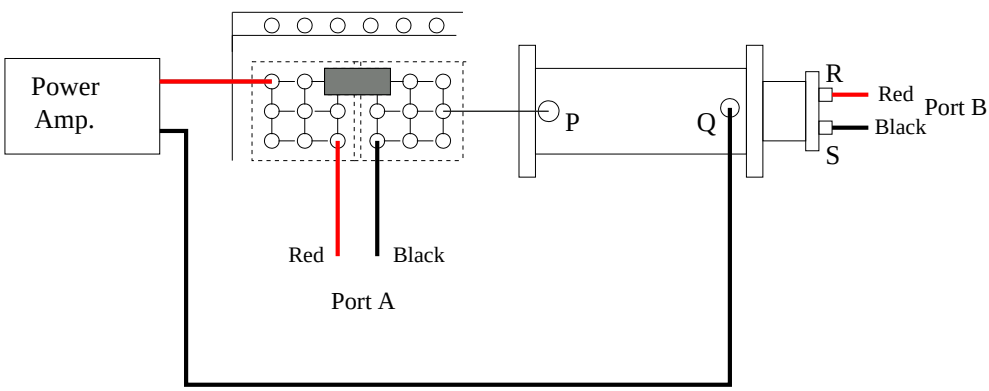

Figure 10: The physical setup

5. Then print the graph for one of the peaks [instructions are in the PASCO Interface and Computer Primer section (see Appendix F.)]

   QUESTIONS:

   Q1: The shape of curve A is not quite a 'square wave'. Why not? HINT: this is an LR circuit with a time constant $\tau = L/R$

   Q2: Are the peaks of voltage across the secondary coil, (curve B) that correspond to current on vs. current off about the same size? Explain.

   Q3: Are the peaks of voltage across the secondary coil, that correspond to current on vs. current off of the same polarity? Explain.

PROCEDURE II: (15 min)

1. Remove the voltage sensor banana pins from the terminals R and S of the secondary coil and insert them into the terminals P and Q of the primary coil, without disconnecting these terminals from the power supply.

2. CLICK on the ON button of the Signal Generator, next CLICK on START and then, after a second or so, CLICK on STOP.

3. The Monitor now displays two curves:
   - one curve (curve A) looks like a square wave, but not quite; it shows the voltage across the external 100 Ω resistor, and therefore tells you how the current flowing through the primary coil varies with time.
   -the other curve (curve B) shows the voltage across the primary coil.
   The two curves look very similar: they should have about the same height, and should rise and fall at the same times.

   If curve B is inverted relative to curve A, exchange the banana pins in terminals P and Q and repeat item 1.2 of this procedure.

4. Adjust the graph axes so that just one full cycle may be seen and then print out copies for your lab manual [instructions in PASCO Interface and Computer Primer section (refer to Appendix F.)].

   QUESTIONS

   Q1: The shape of curve A is not quite a 'square wave', why not? HINT: this is an LR circuit with a time constant $\tau = L/R$
   Q2: The curve that describes the voltage across the primary coil, (curve B) is similar to curve A. Why? HINT: think of two approximately equal resistors in series.
   Q3: The curve that describes the voltage across the primary coil, (curve B) is similar to curve A, but it shows 'spikes'. Why? HINT: the voltage across this coil is due to two factors, R and L.

E-6: Cathode Ray Oscilloscope and Differential Amplifiers

OBJECTIVES: To learn the basic operation of an oscilloscope in order to observe the voltage *vs* time relationships of basic electrical signals.
Preliminary Question:

- What signal (voltage or otherwise) *vs* time displays do you have in your house?

APPARATUS:

Dual-trace oscilloscope plus manual, signal generator plus frequency counter, digital multimeter, (DMM); circuit plug board & component kit; differential amplifier.

Part A – Operation of the Oscilloscope
(Leader, Model 1021, or Hitachi, Model V-202F)

INTRODUCTION:

The oscilloscope is basically a graph-displaying device – it draws a graph of an electrical signal. In most applications the graph shows how signals change over time: the vertical (Y) axis represents *voltage* and the horizontal (X) axis represents *time*. The intensity or brightness of the display is sometimes called the Z axis. This simple graph can tell you many things about a electrical signal. Here are just a few, you can ...

- determine the time and voltage values of a signal.
- measure the frequency of an oscillating signal.
- see the "moving parts" of a circuit represented by the signal.
- tell how often a particular portion of the signal is occurring relative to other portions.
- find out how much of a signal is direct current (DC) or alternating current (AC).
- tell how much of the signal is noise and whether the noise is changing with time.

Your dual trace analog oscilloscopes have circuits which can alternately display sweep signals from two different input channels (Y_1 and Y_2). Unfortunately this instrument can address only a single point on the display window at one instant in time. However the screen is coated with a phosphor coating which whose image persists for a short time. When this property is combined with the finite time resolution of the eye one can observe "simultaneous" dual traces.

CAUTION: Avoid placing signal generator on top of scope.

[Stray magnetic fields from power supplies can interfere with the cathode ray tube (i.e., the display or CRT) operation and create a noisy (fuzzy) "trace."]

If you are unfamiliar with the various control knobs and switches you should read through this section carefully.

SUGGESTED PROCEDURE (refer to Fig. 1):

1. Using a BNC cable and the sinusoidal wave signal output from the function generator (1kHz, 1V rms) connect the signal to the CH1 input (# 7) oscilloscope (or *scope*). Note that each input, CH1 and CH2, has a three position switch (#6 or #15) for either grounding the input (GND), coupling the signal through a capacitor (AC), or a direct connection (DC). Using the AC input (*use this position*) removes all DC components of the input signal.

HORIZONTAL X SWEEP

16 TIME VARIABLE provides a countinously variable adjustment of the sweep rate.
16 PULL x10 MAG switch expands the horizonal deflection by a factor of ten
17 X–POSITION control adjusts the horizontal positon of the CRT trace
18 TIME/DIV switch selects the horizontal sweep rate or X–Y operation (fully clockwise position)
NOTE: TIME/DIV setting is accurate only when the TIME VARIABLE (16) control is turned fully clockwise to the calibration (CAL) positon.
19 HOLDOFF control may be used for complex signal when a delay of the trigger signal is desired; normally fully counterclockwise

TRIGGER INFO

20 LEVEL control uses the SOURCE(24) signal, voltage and slope (dV/dt), to decide when to sweep (trigger) the trace
21 EXT TRIG IN connector is for providing an external trigger signal (only valid when SOURCE(24) is set to EXT)
22 MODE switch sets the triggering mode:
AUTO automatically sweeps the trace when the trigger signal drops below 25 Hz.
NORM sweeps the trace horizontally when a trigger signal is given
TV–H and TV–V are for video signals
23 COUPLING switch selects the trigger signal coupling 24 SOURCE switch selects the trigger signal source
DC, no modification of trigger signal HF REJ, inserts a high frequency filter (4 kHz) in series
AC, place a large capacitor in series with the trigger signal LF REJ, inserts a low frequency filter (4 kHz) in series

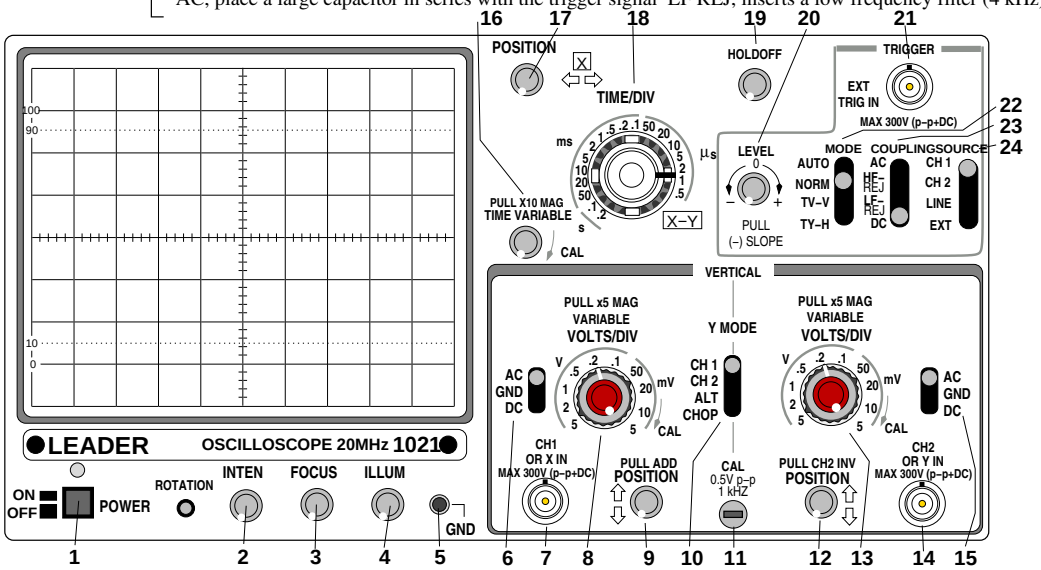

1 POWER switch, push in to turn power on or off, POWER lamp lights when on.
2 INTEN control, adjusts bright ness of the CRT display
3 FOCUS control, adjust CRT focus to obtain maximum trace sharpness
4 ILLUM control, adjusts scale illumination for better viewing
5 GND access to instrument grounds

VERTICAL Y SWEEP

TWO inputs may viewed simultaneously, CH1 (channel 1) and CH2 (channel 2), referenced to ground.
6 and 15 switches select the coupling for the CH 1 (7) and CH 2 (14) inputs
DC, no modification AC, place a capacitor in series GND connect input to ground (signal is bypassed)
7 CH 1 (or X IN) connector is the signal for triggering (23) and for displaying (10)
14 CH 2 (or Y IN) connector is the signal for triggering (23) and for displaying (10)
8 and 13 VOLT/DIV knob set the vertical scaling for the CRT trace
8 and 13 inner control provides a continuously variable vertical scaling
NOTE: For proper calibration these must be in the fully clockwise position
9 and 12 POSITION controls adjust the vertical position for CH1 and CH2 respectively.
10 V MODE switch selects which inputs (CH1 and./or CH2) are displayed.

Figure 1

2. Turn on the scope (#1)and note the *four* main groups of controls:

   i. those associated with the *intensity* and *focus* of the trace
   ii. those controlling *vertical deflection* (#6 thru 15).
   iii. those controlling *horizontal deflection* (#16 thru 19).
   iv. those associated with initiating the trace movement, TRIGGER,(#20 thru 24).

3. Nominal starting positions: (If you have trouble finding the beam consult your instructor.)

LEVEL(20)	0 (or so)	VMODE(10)	CH1
MODE(22)	NORM	VOLT/DIV	0.2 V
COUPLING(23)	DC	RED knobs	fully CW (to CAL)
SOURCE(24)	CH1	AC/GND/DC	AC
HOLDOFF(19)	fully CCW	POSITIONs (9,12,17)	centered
TIME VARIABLE(16)	fully CW	INTEN/FOCUS/ILLUM	centered
TIME/DIV(18)	0.2 ms	9,12 and 16	pushed in

Additional desciption of oscilloscope controls

A: The INTENSITY knob controls the trace brightness[3] by varying the potential of a control grid or an aperture near the electron emitting cathode. The FOCUS adjusts the trace sharpness by varying the potential on the focusing anode. POSITION knobs move the traces up and down, and also right and left.

B: The VOLTS/DIV and red VARIABLE knobs provide coarse and fine adjustment of the pattern height by varying the amplification of the signals from the input terminals. To read the *correct* volts/division shown on the scales, the red variable knobs *must* be in the CAL (calibrated) position (fully clockwise).

The V MODE lever permits display of either or both channels; for both use either ALT for alternate sweeps, or CHOP which switches channels at a 250 kHz rate. (Hitachi's DUAL automatically switches from ALT to CHOP at a TIME/DIV setting = 1 ms/DIV).

Except for the Hitachi, pulling out the CH1 POSITION control (PULL ADD) adds both channels (CH1 + CH2), and pulling out the CH2 POSITION control (PULL INV) inverts its signal (-CH2). Hence using both PULL ADD and PULL INV gives the *difference* of the two channels (CH1 + -CH2). (For the Hitachi use the ADD or DIFF on the vertical MODE lever).

C: The TIME/DIV and VARIABLE or SWP/VAR knobs give coarse and fine control of the trace horizontal sweep motion. Again for the TIME/DIV scales to be *correct*, set the VARIABLE (or SWP/VAR) knob at the CAL position (fully clockwise).

Once the trigger requirements have been satisfied, the scope sweeps the trace horizontally from left to right at a uniform rate (set by the TIME/DIV knob), and then quickly returns the trace to the start position. These trigger circuits are useful for synchronizing the sweep start with some common feature of the input signal although the signal itself may not be perfectly periodic (e.g. your heartbeat). (see Fig. 2).

[3]CAUTION: a stationary intense spot may damage the screen

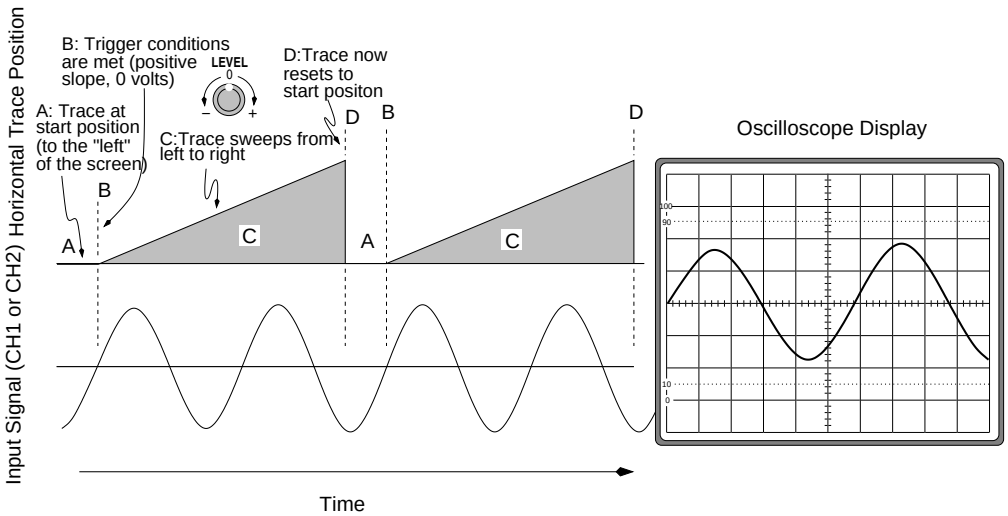

Figure 2

D: The TIME/DIV knob, when set to the $\boxed{\text{X-Y}}$ position, disconnects the internal horizontal sweep generator and uses the CH1 X input to specify the horizontal sweep; CH2 is still connected for vertical displacements and thus becomes Y. (For Hitachi also set MODE lever to CH 2 X-Y). The resultant X-Y pattern forms a Lissajous figure.

E: Other triggering options:

- **To sweep automatically:** Set trigger MODE lever (22) to AUTO.
- **To trigger and sweep only on a large signal:** Set trigger *MODE* lever (or Hitachi horizontal MODE) to NORM and set SOURCE lever to the appropriate CH1 or CH2; then adjust trigger LEVEL knob (20) to desired amplitude.
- The trigger COUPLING lever can also couple the trigger input signal directly (DC); through a large capacitance, (AC); or (except Hitachi) through a filter (HF REJ or LF REJ) which can reject high or low frequencies: > 4 kHz or < 4 kHz.
- The trigger SOURCE lever has options of triggering at 60 Hz (LINE) or by using an external trigger (EXT) signal.

Part B - Suggested Oscilloscope Experiments

1. *Observe both sine and square wave signals of various frequencies.* Experiment with setting to learn the effect of different controls, (e.g. automatic *vs* triggered sweeps). For the square waves look both at low frequencies and at maximum frequencies. Notice any effects of changing the input coupling (#6 or 15) (switch back and forth from AC to DC). Sketch the appearance of "square" waves at high and low frequencies. If possible, explain the differences.

   i. Verify the calibration of the scope's Y scaling by using the 0.5 volt peak to peak square wave signal from the calibration terminal (CAL or #11). To connect this signal to the scope, just touch the exposed calibration terminal with the center gold pin of the *bayonet coaxial* (BNC) connector on the input cable.

ii. Use a digital multimeter (DMM) to *measure* both the *sine* wave and *square* wave voltage output of the signal generator. Avoid very high frequencies since capacitative loading may then be a problem when the signal generator is also connected to the scope.

iii. Compare the DMM readings (which are r.m.s. or "effective" voltages) with the *peak-to-peak* voltages reading directly off the scope screen. Are they consistent? Remember the voltage amplitude is one-half the peak to peak voltage and the rms voltage is

$$\frac{\text{peak voltage}}{\sqrt{2}} = \frac{\text{peak-to-peak voltage}}{2.818} \quad !$$

2. OPTIONAL: Check the calibration of the scope's X (horizontal) scaling by using the TIME/DIV reading to measure the period for one wavelength of the signal. Compare the deduced frequency with signal generator scale setting and/or that of a frequency meter.

OPTIONAL:

Lissajous Figures: When two periodic motions at right angles combine, the resulting pattern is generally very complex. However, sine waves whose frequencies are in small integer ratios give simple stationary patterns. For example see Fig. 3.

To produce *Lissajous* figures on the scope, set the TIME/DIV control to $\boxed{\text{X-Y}}$. Connect the 60 Hz terminal to the CH1 X input. To the CH2 Y input apply a sine wave input whose frequency bears a simple ratio with respect to 60 Hz. (For the Hitachi, also set the vertical MODE lever to CH 2, X-Y.)

A Lissajous pattern should result. Adjust amplitudes and positions to locate the figure properly on the screen. The frequency scale on the signal generator may not be accurate, but the 60 Hz power line is an excellent frequency standard.
Use Lissajous figures to calibrate your signal generator at 120 Hz and 180 Hz.

Observe and explain patterns with the frequency ratios of Fig. 3. Also try a ratio 2:3.

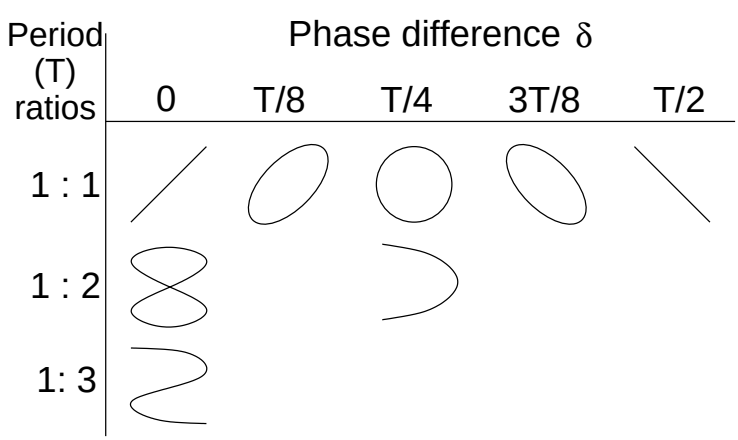

Figure 3: Examples of Lissajous figures.

Part C – Differential Amplifiers

INTRODUCTION:

Amplifiers are devices which usually increase the amplitude of the output signal compared to the input signal. The customary symbol for an amplifier is a triangular shape:

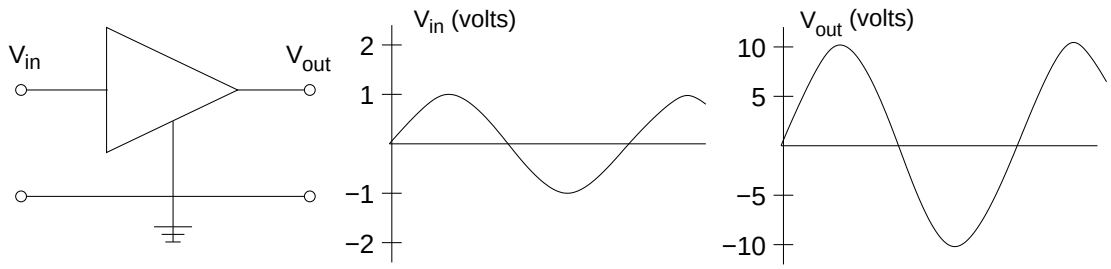

Figure 4

In the sine wave example above, the gain is 10 and the input signal is between an input terminal and ground. The internal oscilloscope amplifiers for channels Y_1 and Y_2 are of this type and have a common ground. Because of this common ground, one has problems in using a scope to examine **simultaneously** voltages across individual circuit elements that are in series (see below, also E9 lab).

We can avoid these problems by interposing "differential amplifiers" which have two inputs V' and V'', (neither at ground), and which amplify only the voltage difference $(V' - V'')$. Symbolically:

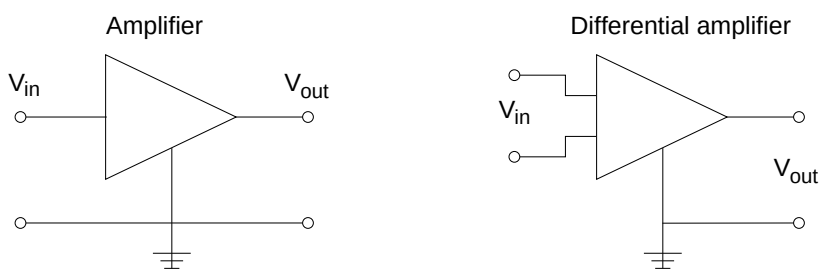

Figure 5

Note now that the ground of the output signal is independent of any input ground.

SUGGESTED EXPERIMENTS:

1. *Become familiar with the circuit plug board (Fig. 6) and the banana type plug-in components.* Note there are 24 groups with 9 socket plug-in holes in each group. While the 9 plug-in holes in each group are electrically connected together, each of the 24 groups is isolated unless connected by plug-in components. Two isolated metal bus bars (with banana plug-in holes) on the sides may facilitate common connections for some circuits.

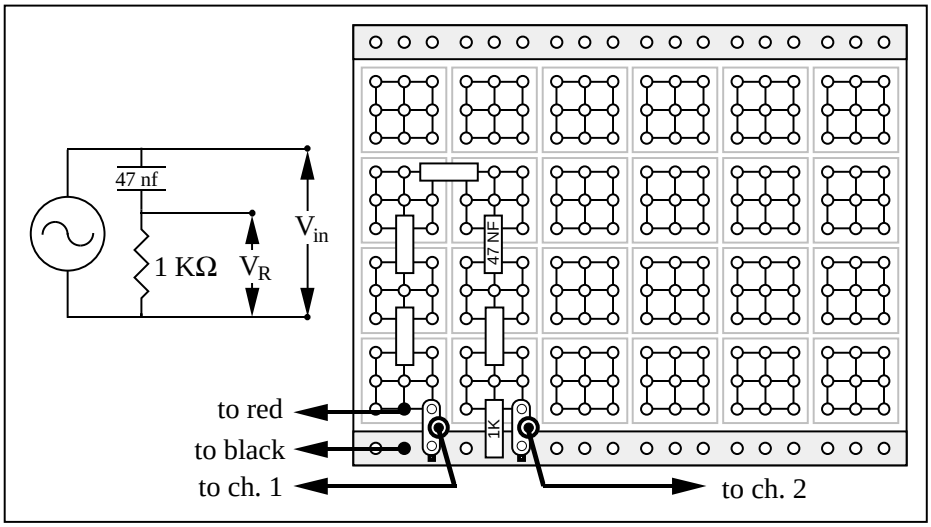

Figure 6

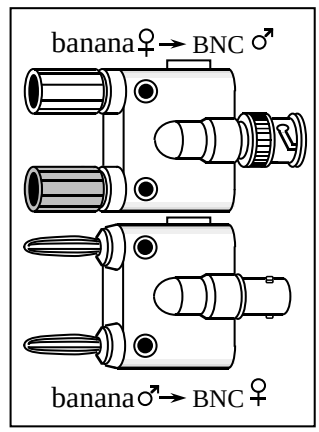

The plug-in components (metal bridges, resistors, capacitors, inductors, or other circuit elements) will only connect between adjacent groups of the 9 (already connected) plug-in holes or from the edge metal bus bars to an adjacent 9 hole group. We also provide coaxial cable to banana plug-in connectors: these facilitate using signal generators, scopes, etc. with the circuit plug-in board. *Be sure to notice the raised retangular protuberance on one side of the connector.* This indicates the connector ground bar side.

As a first configuration use the RC series circuit sketched in Fig. 6 as a guide using the scope to observe simultaneously the output of the AC signal generator and the signal across the resistor. How do the relative V_{peak}-to-V_{peak} amplitudes compare at low, medium and high frequencies. It may help to know that the reactance X_C of a capacitor is $X_C = 1/\omega C$, the impedence Z is $Z = \sqrt{R^2 + X_C^2}$ and medium frequencies are given by $X_C \approx R$. Qualitatively explain the behavior.

Do to voltage peaks always occur at the same time?

2. The *phase shift* ϕ between the current (monitored by the voltage drop across the resistor) and the voltage has the relation $\tan\phi = -X_C/R = V_C/V_R$. To observe this behavior you must simultaneously monitor the signal across the resistor and capactors. Unfortunately, only one of these components does reference to ground; a necessary aspect of your scope inputs. (Which one?) To compensate for this short coming a module containing dual differential amplifiers is provided.

   Connect the resistor and capacitor signal to the differential amplifiers as shown in the figures below. Connect the outputs of the differential amplifiers to the scope

CH 1 and CH 2 inputs, and set both gains to 1.

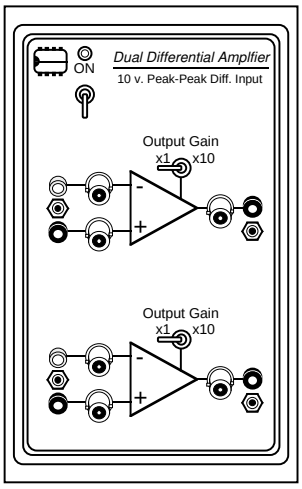

Figure 7: Dual differential amplifier module.

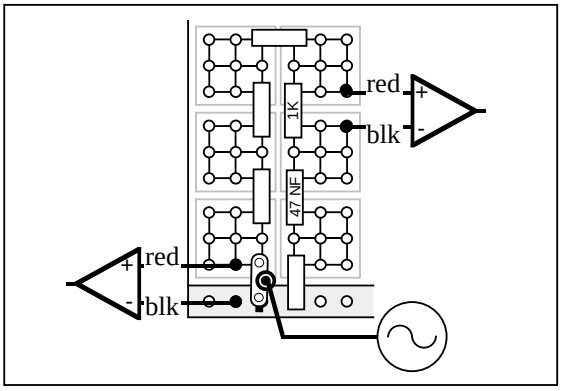

Figure 8: Inputs to differential amplifiers.

Sketch the oscilloscope display when $X_C = R$ and show how you can use this information to obtain the phase shift. Compare your result to that of the $\tan\phi$ formula.

3. Replace the capacitor with the diode and use the differential amplifiers to now observe the action of a silicon diode on an A.C. signal.

NOTE: Silicon diodes (Fig. 9) are junctions between silicon semiconductors with different type doping: n-type with an impurity which easily donates electrons, e.g. phosphorus (P) in silicon;[4] and p-type with an "acceptor" impurity, e.g. aluminium (Al) in silicon[5]. The junction between the two types becomes a very non-linear device which if subjected to an electric field acts almost as a one way valve to current flow. The diode symbol has the arrow pointed in the direction of conventional easy current flow (from p-type to n-type) though actual electron flow may be in the opposite direction.

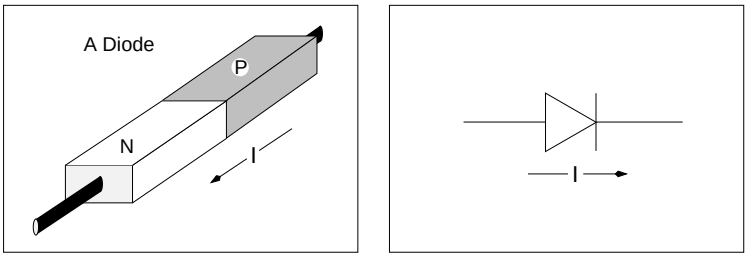

Figure 9

SUGGESTED EXPERIMENT:

Set up the circuit plug board as shown in Fig. 10. Connect Y_1 and Y_2 to the two scope inputs.

[4] As one might expect since silicon has valence 4, phosphorus valence 5, and aluminum valence 3

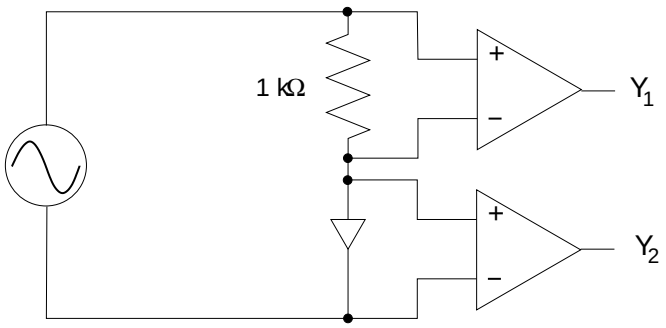

Figure 10

Vary the amplitude of the signal generator input and sketch the resultant waveforms across the resistor and across the diode.

E-7: A.C. Circuits

OBJECTIVE:

To study voltage and phase relationships in A.C. circuits

APPARATUS:

Dual trace oscilloscope & manual; differential amplifiers, circuit plug board & component kit; signal generator & frequency counter; digital multimeter (DMM).

Part A: **SERIES A.C. CIRCUITS**

INTRODUCTION:

Overview: Remember that "rms" value of the AC voltage or current means the "root-mean-square" and this value is useful even when the voltage or current is changing but not as perfect sine waves. For example, the voltage used to provide power for most lights and appliances is roughly $V_{rms} = 110$ Volts. Some higher power appliances such as stoves use $V_{rms} = 220$ Volts. Although the voltage and current may often be negative, the rms values are always positive. Similarly, the impedance Z is always positive. Sometimes the word "effective" is used instead of "rms" but it means the same thing. For a pure sine wave voltage, the peak voltage and rms voltage are related by $V_{rms} = \frac{V_{\text{peak}}}{\sqrt{2}}$. Thus the peak to peak voltage *swing* of a 110 volt AC wire is $V_{\text{peak}} = 110 \times \sqrt{2}$ volts ≈ 155 volts!

The rms concept allows us to describe any AC voltage as having a particular *rms* voltage and a particular *phase*.

In this experiment we will use the subscript "rms" for some measurements and will use "V" or "v" or "I" or "i" without this subscript when referring to *instantaneous* values of the voltage or current. Thus, even if two rms voltages are equal, ($V_{rms} = v_{rms}$), V may *not* be equal to v since V and v may have different phases.

The impedance Z (in ohms) of any part of a circuit is the ratio of the rms voltage across that part and the rms current though that part: Because impedance is defined as a ratio of voltage/current, impedance is measured in ohms. If $\omega = 2\pi f$ and we measure L and C in henries and farads, respectively, then it can be shown that the impedance X_R of an resistance R is R and the impedance X_L (in ohms) of an inductance L is $X_L = \omega L = 2\pi f L$. and the impedance X_C (in ohms) of a capacitance C is $X_C = \frac{1}{\omega C} = \frac{1}{2\pi f C}$. It can also be shown that the impedance Z (in ohms) of an RLC series circuit (shown in Fig. 1) is

$$Z = \sqrt{R^2 + (X_L - X_C)^2}$$

where, X_L and X_C are the impedances of the individual inductor and capacitor.

The impedance Z of the RLC series circuit is a *minimum* for $X_L = X_C$. The frequency for which this occurs is the *resonant frequency*. At this frequency, f_r, the current thru R is maximum, but the voltage $V_{rms\ LC}$ across the LC series combination is a minimum and in fact would be zero if the inductor had no resistance. Hence one can search for f_r by varying the frequency and looking either

1) for a *maximum* $V_{rms\ R}$ signal, or 2) a *minimum* $V_{rms\ LC}$ signal.
A search for the minimum has a practical advantage that near the resonant frequency, f_r, one can increase enormously the detection sensitivity by going to maximum signal generator amplitude and also by going to higher scope gain.

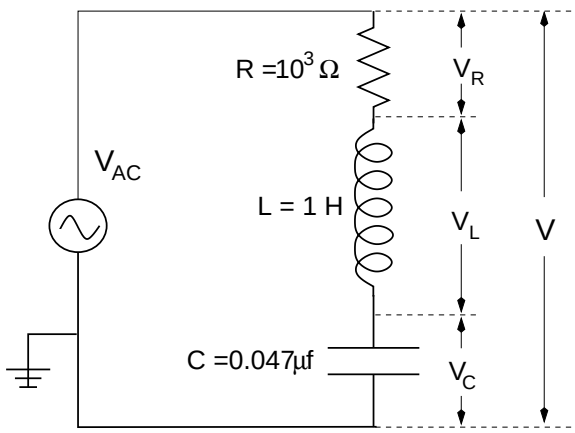

Figure 1: A series LRC circuit.

Our dual trace scope allows the simultaneous observation of two voltages. If we use differential amplifiers (E-8) to avoid ground problems, then we can compare the signal across the resistor (displayed on one trace) with the signal across other circuit elements (displayed on the other trace). Since across a resistor the voltage and current are in phase, and since the current throughout a series circuit is the same, we can observe the relative phase relationship between the current and any other measured voltage.

SUGGESTIONED PROCEDURE:

1. Hook up the circuit plug board as in Fig. 1. (The signal generator supplies V_{rms} (or V_{AC}.)
2. Use the digital multimeter (DMM) to measure V_{rms}, $V_{rms\ R}$, $V_{rms\ L}$, and $V_{rms\ C}$ at frequencies near 400, 700, and 1000 Hz. Is $V_{rms} = V_{rms\ R} + V_{rms\ L} + V_{rms\ C}$? Explain.
3. Calculate the frequency for which resonance should occur.
4. Use the scope to search for the *resonant frequency* f_r by the following techniques and also estimate the uncertainty Δf_r in each measurement. Use the trigger output of the signal generator to trigger the scope. (For the Krohn-Hite signal generator, use the "TTL" output. This output gives a "rectangular" signal, snapping between zero and +3 volts, which is suitable for digital circuitry such as computers and counters.)
   (i) As one varies f, observe the *maximum* in the *current* I_{rms} *thru R*. (Since $I_{rms} \propto V_{rms\ R}$, use a differential amplifier with scope channel Y_2 to look at $V_{rms\ R}$).
   (ii) Observe the *minimum* in the *voltage* $V_{rms\ LC}$ *across the LC combination*. (Use the other differential amplifier to input $V_{rms\ LC}$ to scope channel Y_1. To improve sensitivity, turn up signal amplitude and/or scope gain).

(iii) *Produce a Lissajous figure* using $V_{rms\ R}$ and $V_{rms\ LC}$ as the X and Y inputs. (Use the X-Y setting of the TIME/CM or TIME/DIV knob and set mode lever to X-Y). At resonance the usual elliptical pattern becomes a straight line as $V_{rms\ LC}$ goes to zero. Again turn up the gains to improve sensitivity.

5. Compare the calculated f_r with your observed values. Is there agreement?

6. *Phase relations:* Use scope channel 1 (plus a differential amplifier) to observe the total voltage $V_{rms\ RLC}$ across the RLC combination. Use scope channel 2 (plus differential amplifier) to observe $V_{rms\ R}$. Fig. 2 shows the phasor relationships.

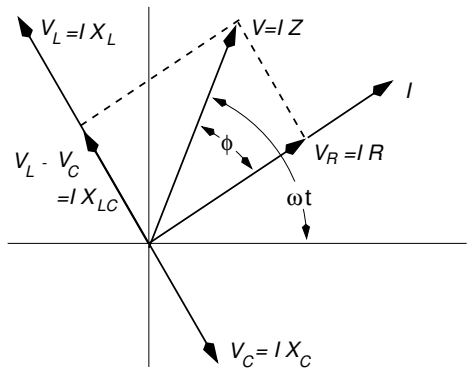

Figure 2

(i) Set the signal generator near f_r. At resonance the two signals should be in phase. Why? (If at $f = f_r$ the signals are 180° out of phase, the input polarity is wrong on one differential amplifier; hence interchange the input leads on *one* of the differential amplifiers.)

Find the resonant frequency by this method. Adjusting gain and position controls so the signals nearly overlap will help.

(ii) With $f = f_r$, short out the capacitor by a jumper, (e.g. with metal bridge connector). Note what happens. Unshort capacitor and then short the inductor. Explain results in terms of Fig. 2. Does current lead or lag the applied voltage in each case?

(iii) Remove the shorts and try $f < f_r$ and $f > f_r$. Explain phase behavior.

OPTIONAL:

A quality factor Q (so named because the energy loss ΔU per cycle of energy U stored in oscillating LC elements is inverse to the circuit's Q) is

$$Q = \frac{1}{R}\sqrt{\frac{L}{C}}.$$

Also Q measures the sharpness of a resonance. Rewrite Z in terms of Q:

$$Z = R\left[1 + Q^2\left(\frac{f}{f_r} - \frac{f_r}{f}\right)^2\right]^{1/2}.$$

Note that large Q means Z will assume large values when f differs slightly from f_r. Hence sharp resonant effects occur. Calculate Q for your circuit. What $\Delta Z/Z$ results for $\Delta f/f_r = 0.1$? (Large Q occurs for R small, but the resulting resonant current may be excessive. To achieve sharp tuning, radio circuits may have Q's ~ 100).

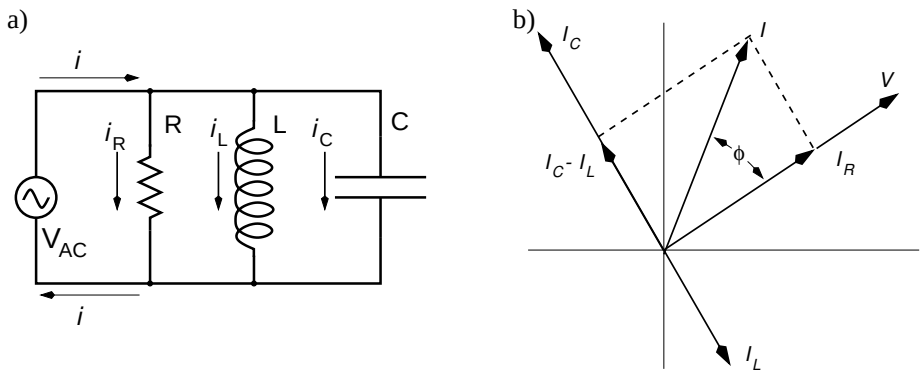

Figure 3: A parallel LRC circuit.

Part B: **PARALLEL A.C. Circuits**

INTRODUCTION:

The parallel RLC circuit is very common in radio and TV circuits. The circuit analysis follows from Kirchhoff's laws, but is not in many beginning texts. The common terminal voltage V is across each element (see Fig. 3a), and the instantaneous current i is the algebraic sum of the instantaneous i_R, i_L, and i_C.

Since i_R is in phase with V, but i_L lags V by 90°, and i_C leads V by 90°, we can describe the situation by the rotating vectors in Fig. 3b where I is the vector sum of I_R, I_L, and I_C. Hence from Fig. 3b

$$I_{rms} = \sqrt{I_{rms\ R}^2 + (I_{rms\ C} - I_{rms\ L})^2}$$

where $I_{rms\ R} = \frac{V_{rms}}{R}$, $I_{rms\ C} = \frac{V_{rms}}{X_C}$, and $I_{rms\ L} = \frac{V_{rms}}{X_L}$. Substituting these gives

$$I_{rms} = V_{rms}.\sqrt{\frac{1}{R^2} + \left(\frac{1}{X_C} - \frac{1}{X_L}\right)^2}.$$

Resonance still occurs for $X_L = X_C$ but the total current, I_{rms}, is then just the current thru R and thus is a MINIMUM (in contrast to the series resonant case).

Since V is the same for all the parallel elements, the **relevant phase differences are between the currents**. To measure the total current I_{rms} and the phase between it and the voltage V_{rms}, we will insert a 22 kΩ sampling resistor R_S in series with the signal generator. See Figure 4.

Measure the voltage $V_{rms\ S}$ across the sampling resistor R_S by connecting the resistor ends to scope channel 2 via a differential amplifier. Since the voltage and current are in phase across a resistor, this signal $V_{rms\ S}$ is proportional to the total current I_{rms}.

We use channel 1 and the other differential amplifier to view the common voltage V across all the parallel elements. At resonant frequency f_r the currents from L and C will cancel since they are of equal magnitude but (always) 180° out of phase. Hence at f_r the total current I will be just that thru R, i.e. $I = I_R$, and V and V_S (or I) will be in phase.

The smaller the sampling resistor R_S, the less disturbance its voltage drop $V_{rms\ S}$ will have on the net voltage V_{rms} applied across the parallel circuit. However distortion in the generated sine wave may bother when R_S is small and large currents flow. Our suggested $R_S = 22$ kΩ is a compromise. Even so you may see a factor 2 change in V_{rms} as f varies; however we can compensate by adjusting the signal generator amplitude to keep V_{rms} constant as the frequency changes.

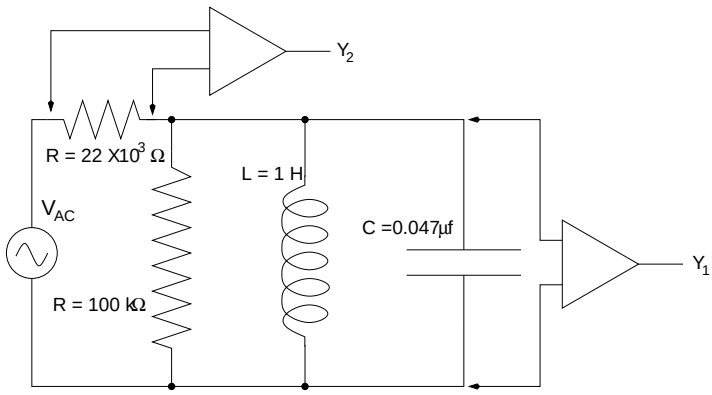

Figure 4: A parallel LRC test circuit.

SUGGESTED PROCEDURE:

1. Hook up the circuit plug board as in Fig. 4 and again trigger the scope externally from the signal generator. (We chose a large $R = 100$ kΩ circuit resistance to limit the resonant current and thus enhance sensitivity.)

2. Set the frequency near f_r found in Part A: SERIES RESONANCE. Adjust the signal generator amplitude to give a 1 volt scope signal (p to p) for V in channel 1.

3. Vary the frequency f on both sides of f_r by about 300 Hz. Adjust the signal generator amplitude to keep V_{rms} (i.e. Y_1) constant as f and $V_{rms\ S}$ change. Since $I_{rms} \propto V_{rms\ S}$, plot $V_{rms\ S}$ versus f. Note the resonant minimum in I_{rms} at f_r.

   OPTIONAL: Replace the 22 kΩ R_S with a 1 kΩ resistor. Repeat step #3 and note the increased distortion of V_S at f_r, but the relative constancy now of the voltage V, (channel 1), across the circuit elements.

4. Starting with $f = f_r$ observe how the *phase relations* between I (which is in phase with V_S) and V change as one goes to $f > f_r$ and $f < f_r$. (Again if at $f = f_r$, the two signals are *not* in phase but are 180° out of phase, interchange the input leads to one of the differential amplifiers).

5. *Use the Lissajous figure technique* to find f_r: namely, with the horizontal deflection (TIME/CM or TIME/DIV) knob at X-Y (and the mode lever at X-Y) use V and V_S as the X-Y inputs. As V_S (or I) goes thru its minimum, the elliptical pattern collapses to a straight line. Again one can increase gains to improve sensitivity.

6. Move the scope trace for V near to the top of the scope screen.

7. Move the scope trace for I near to the bottom of the scope screen.

8. Then the ratio of $\frac{\text{Magnitude of upper trace}}{\text{Magnitude of lower trace}}$ is proportional to the impedance Z.

9. Notice that, as you change the frequency, Z given by this ratio of traces, goes through a maximum at the resonant frequency.

E-8: Transistors

OBJECTIVE:

To experiment with a transistor and demonstrate its basic operation.

APPARATUS:

An **npn** power transistor; dual trace oscilloscope & manual; signal generator & frequency counter; power supply (±15 V fixed/±9 V variable); circuit plug board & component kit; two digital multimeters (DMM); differential amplifiers.

INTRODUCTION:

Our junction transistor (Fig. 1) is like two back to back *np* diodes (see E-8 Part C, #3). Hence there are two possibilities, an *npn* transistor and a *pnp* transistor. Our *npn* transistor has a central p-type layer (the *Base*) between two n-type layers (the *Emitter* and *Collector*). There are other type transistors which we will not discuss, (e.g. a *MOSFET:* Metal-Oxide Semiconductor-Field-Effect-Transistor).

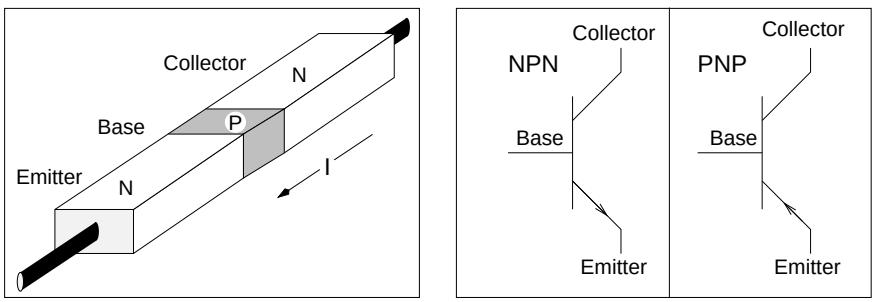

Figure 1

For an *npn* transistor the *collector is positive relative to the emitter*. The base-emitter circuit acts like a diode and is normally conducting (i.e. forward-biased). The base-collector circuit also acts as a diode but is normally non-conducting (reverse biased) if no current flows in the base-emitter circuit. However when current flows in the base-emitter circuit, the high concentration gradient of carriers in the very thin base gives an appreciable diffusion current to the reversed biased collector. The resulting collector current I_c depends on the base current I_b. We write $\mathrm{I}_c = \beta I_b$ where β is the current amplification factor.

> *PRECAUTIONS:* Although our power transistor is fairly indestructible, its characteristics are temperature sensitive. Hence avoid exceeding the voltages suggested; also leave the power supply off when not making measurements; read currents and voltages to two significant figures only.

SUGGESTED EXPERIMENTS:

1. *CURRENT Amplification:* Measure β for various emitter to collector voltages, V_{ec}. Set up the circuit as in Fig. 2.

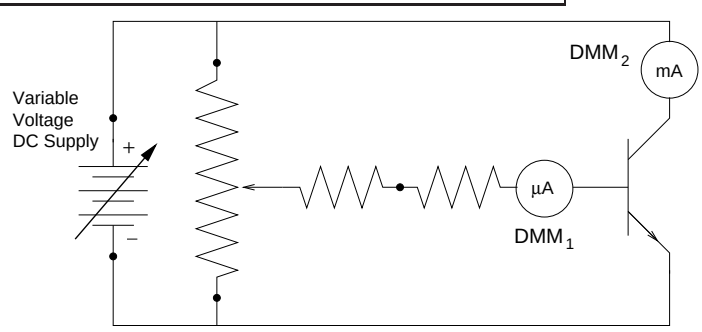

Figure 2

Start with the voltage divider completely counter-clockwise so that the emitter-base voltage V_{eb} is a minimum. With the variable power supply set to 3 V, record the I_b measured on DMM_1 and the I_c on DMM_2

Repeat the readings for ten reasonably spaced (higher) settings of the voltage divider (i.e. higher V_{eb} and hence higher I_b.

Calculate $\beta(= I_c/I_b)$ and plot it against I_b. Over what range of I_b is β reasonably constant? Repeat the above but with emitter to collector voltage V_{ec} now at 7 V.

2. (Optional) *MEASUREMENT OF I_c vs V_{eb}:* Remove the multimeter DMM_1 (used as a microammeter) from the circuit of Fig. 2 and use it instead as a voltmeter to measure the emitter to base voltage V_{eb}. With the variable power supply set to give 7 V for V_{ec}, use the voltage divider to vary V_{eb}. Read and record both V_{eb} and I_c for 10 reasonably spaced values of V_{eb}. Plot I_c vs V_{eb}. The results are very similar to a diode curve (as expected since I_c is proportional to I_b over the region where β is a constant).

3. *VOLTAGE Amplification:* By adding a large load resistor in series with the collector, one can convert the current amplification β observed earlier into a voltage amplification. Hook up the circuit plug board as in Fig. 3.

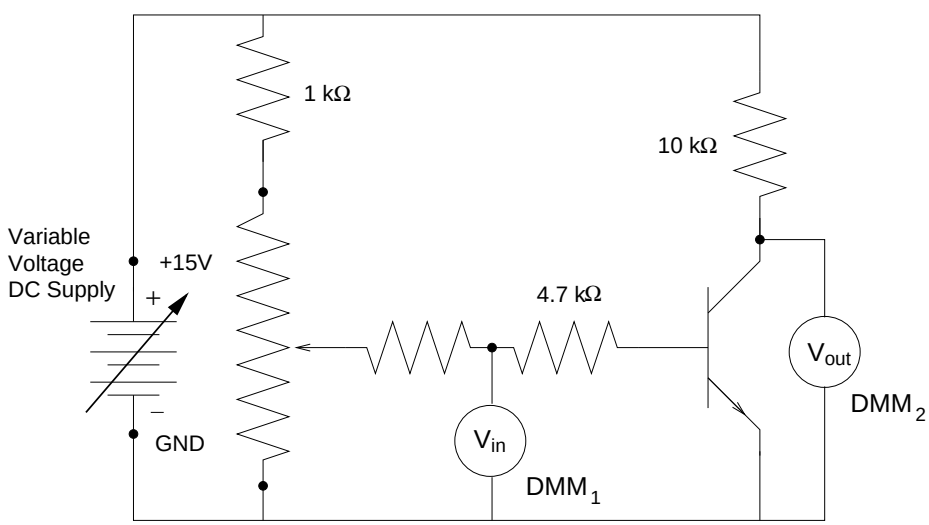

Figure 3

The input voltage to the transistor V_{in} includes the drop across the 4.7 kΩ protective resistor. The voltage gain is $\mathrm{G} = \Delta V_{out}/\Delta V_{in}$. Record input voltages V_{in} and output voltages $V_{\mathrm{out}}(= V_{ec})$ for ten reasonably spaced values of V_{in} from 0 to 5 volts.

Graph V_{out} vs V_{in} and calculate the voltage gain G at the steeply changing part of your graph. The value of V_{in} at the center of this region we call the "operating voltage" of the amplifier. How would the gain change if the load resistance was 2.2 kΩ instead of 10 kΩ?

4. *Distortion effects when amplifier is overdriven:* Set up the circuit plug board as in Fig. 4. Connect Y_1 and Y_2 to the scope. To connect the signal generator to the board, use the BNC to banana plug adapter and remember that the side with the bump goes to ground.

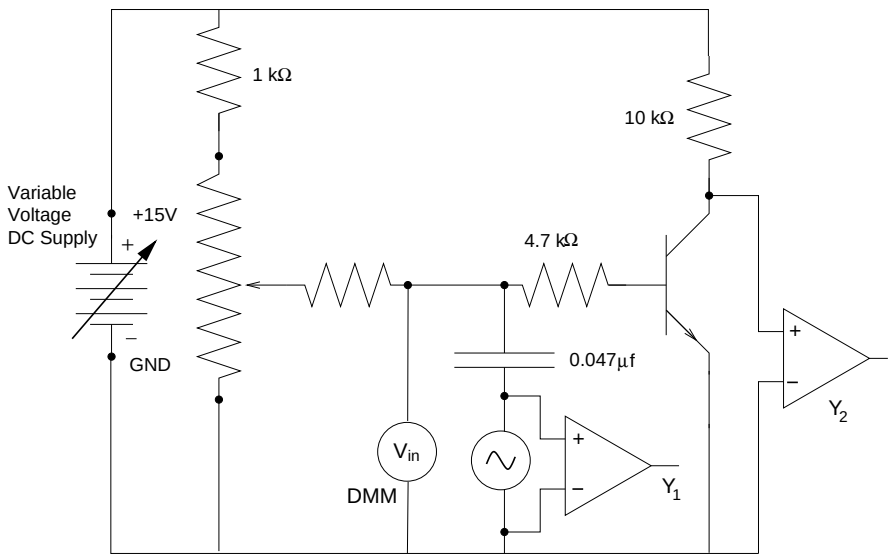

Figure 4

Adjust the voltage divider until the V_{in} is close to the "operating voltage" found in #3.

Vary (and record) the amplitude of the input signal from small values to those which overdrive the amplifier and produce considerable distortion in the output Y_2.

Observe and record the effect of changing V_{in} to values outside of the operating range (where β is constant).

Part II
Sound and Waves

SC-1 Transverse Standing Waves on a String

OBJECTIVE: To study propagation of transverse waves in a stretched string.

INTRODUCTION:

A standing wave in a string stretched between two points is equivalent to superposing two traveling waves on the string of equal frequency and amplitude, but opposite directions. The distance between nodes (points of minimum motion) is one half wavelength, ($\lambda/2$).

The wave velocity, v, for a stretched string is $v = \sqrt{F/\mu}$ where **F = tension in the string** and μ **= mass per unit length**. But v = fλ and hence

$$f = \frac{\sqrt{F/\mu}}{\lambda} \quad . \tag{1}$$

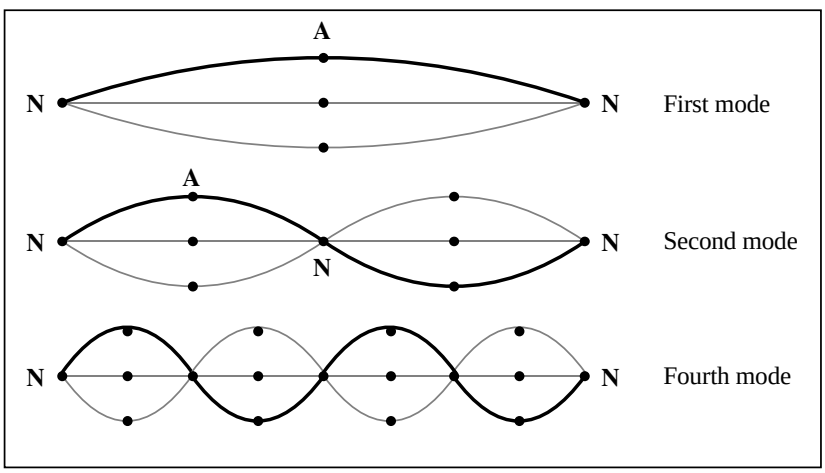

Figure 1: The Modes of a String

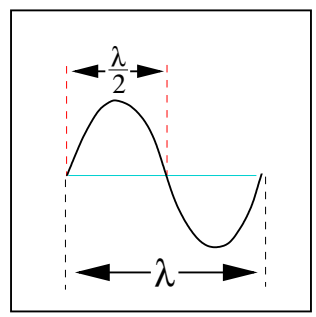

Figure 2: A close-up

PART A: Waves from a mechanical driver (i.e. a speaker)

APPARATUS:

Basic equipment: Electrically driven speaker; pulley & table clamp assembly; weight holder & selection of slotted masses; black Dacron string; electronic balance; stroboscope.

Computer equipment: Personal computer; PASCO© interface module; power amplifier module; various electrical connectors.

The set-up consists of an electrically driven speaker which sets up a standing wave in a string stretched between the speaker driver stem and a pulley. Hanging weights on the end of the string past the pulley provides the tension.

The computer is configured to generate a digitally synthesized sine wave (in volts versus time) with adjustable frequency and amplitude (max: ∼10 V).
PASCO interface: This transforms the digital signal into a smooth analog signal for input into the power amplifier.

Power amplifier: The amplifier transforms the voltage sine wave single into a current suitable to drive the loudspeaker. (A few exotic speakers, often referred to as electrostatic speakers, actually utilize high voltages directly to produce sound.)

Precautions: Decrease the amplitude of the signal if the speaker makes a rattling sound, or if the red pilot light on the amplifier is lit. The generator is set to produce sine waves; **do not change the waveform**.

Note: Although the speaker is intended to excite string vibrations only in a plane, the resultant motion often includes a rotation of this plane. This arises from non-linear effects since the string tension cannot remain constant under the finite amplitude of displacement. [See Elliot, **Am. J Phys.** 50, 1148, (1982)]. Other oscillatory effects arise from coupling to resonant vibrations of the string between pulley and the weight holder; hence keep this length short.

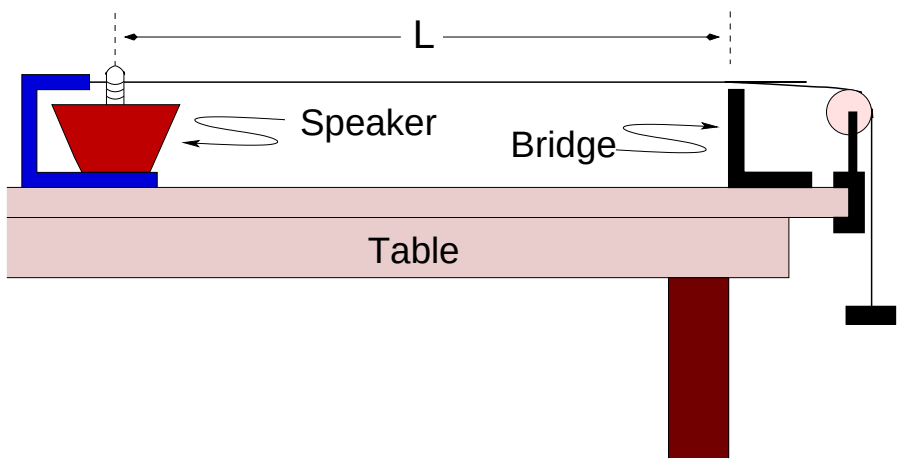

Figure 3: The apparatus

SUGGESTED EXPERIMENTS:
PROCEDURE I: Checking Equation (1)

1. Place the sheet of paper provided on the table; this will make it easier to see the vibration of the string. Measure accurately the distance, L, between the bridge and the pin of the speaker using the two meter ruler; record this in your lab notebook. Click on the LAUNCH EXPERIMENT icon (i.e., the telescope), from the on-line lab manual. The computer monitor will appear as shown in Fig. 4.

2. You will see that the computer is set to produce a 60 Hz sine wave with an amplitude of 2 V. To start the string vibrating **CLICK** the "ON" button.

3. **CLICK** on the up/down arrow in order to change the amplitude or the frequency of the signal although this produces rather large steps. NOTE: The nominal step sizes for adjusting the amplifier frequency and voltage may be much too large. To alter

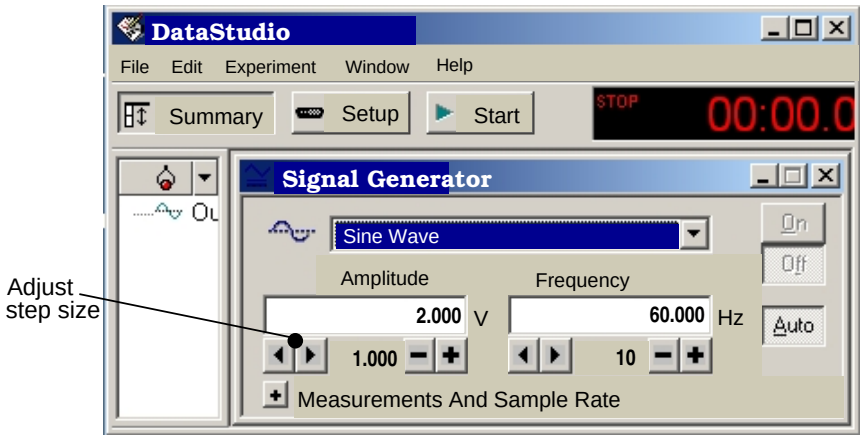

Figure 4: The PASCO DataStudio display.

the step size use the ◀ or ▶ buttons. To alter the current or voltage (which of these depends on configuration) use the + or − buttons. You can also change the value directly by CLICKing the mouse cursor in the numeric window and entering a new value with keyboard number entry.

4. At 60 Hz check eqn. 1 by first calculating the necessary string tension to produce a standing wave in the third or fourth mode. Weigh the string to get μ. Your instructor will provide you with a one meter length of string. (Dacron 30# has $\sim$ 0.283 g/m.) Note that the hanger itself has a 50 g mass so it may not be easy to access the forth mode (depending on L).

   Check your results by adjusting the string tension by increasing/decreasing the weight to find the tension which results in the largest amplitude vibrations. How do the two values (calculated and measured) compare?

5. Now put a 200 g mass on the mass hanger and restart the signal generator. Record the total mass and tension in your lab book.

6. Adjust the frequency so that the amplitude of the oscillation is at its maximum by changing the frequency in 1 Hz steps. This is best done as follows: First decrease the frequency until the amplitude of the string is very small.
   Then increase the frequency in 1 Hz steps, observe that the amplitude first increases and then decreases. Record the best frequency f_2 in your table.

7. Change the frequency to observe the third mode. Find and record the best frequency (using 10 Hz steps at first may be faster).

8. Find and record the frequency of the higher modes.

9. OPTIONAL: Check the frequency f of the string in its 2nd mode with the stroboscope. Note that the stroboscope is calibrated in **RPM** or cycles per minute, NOT Hz (cycles per second). You should find a value close to 70 Hz.

ANALYSIS:

1. Divide the various frequencies f_n by n and enter the values in a table. Calculate the average value of f_n/n; this is the expected value of the frequency of the first mode.

2. Calculate the velocity of propagation on the string using the appropriate equation.
3. Calculate the mass per unit length of the string. How do the two values for the string mass per unit length compare?

PROCEDURE II: f_n vs string tension

In this section you will investigate the dependence of the resonant frequency of a string as a function of the applied tension.

1. Choose six masses between 100 gm and 1 kg and enter the values in the data table.
2. Determine the resonant frequency of the second mode of the string under these different tensions and record your results. (Hint: increasing the mass by a factor of two increases f_n by nominally a factor of $\sqrt{2}$.)
3. Plot a graph of frequency versus mass, m, and include the zero value.
4. Plot a graph of frequency versus $\sqrt{m}$ and again include the zero value.

QUESTIONS:

1. Which of the two graphs can be fitted with a straight line? A parabola? Why?
2. From the slope of the graph having the linear relationship obtain the mass per unit length of the string and compare to your previous result.

PART B: "Virtual" waves on a drum head

PROCEDURE III: (If time permits)

Vibrations of a circular drum head. In this section you will examine, via a virtual demonstration, the vibrational modes of a two dimensional drum head.

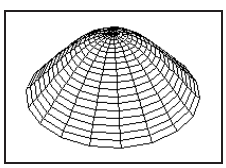

The [0,1] mode.

1. Click on the icon at left to down-load and initiate the MPEG movie viewer to observe the "first" mode.
2. Use the replay and step frame functions to view the motion.
3. Where is the displacement at a maximum? Always at a minimum?

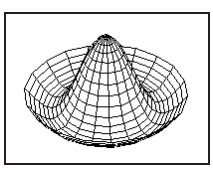

The [0,2] mode.

1. Click on the icon at left to down-load and initiate the MPEG movie viewer to observe the first of the two "second" modes.
2. Use the replay and step frame functions to view the motion.
3. Where is the displacement at a maximum? Always at a minimum?

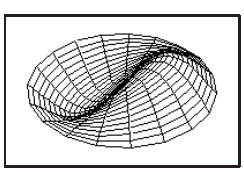

The [1,1] mode.

1. Click on the icon at left to down-load and initiate the MPEG movie viewer to observe the second of the two "second" modes.
2. Use the replay and step frame functions to view the motion.
3. Where is the displacement at a maximum? Always at a minimum?

JAVA APPLET:

If time permits and you are interested the web version of the lab has a link to an applet ../java/ph14e/stwaverefl.htm which animates transverve 1D motion for a propagating wave incident on a fixed or or a free boundary.

S-2 Velocity of Sound in Air

OBJECTIVE:

To calculate the velocity of sound from measurement of the wavelength in air for sound of a certain frequency.

APPARATUS:

Resonance tube with arrangement for varying water level (use only distilled water); rubber tipped hammer; tuning fork; Hg thermometer.

INTRODUCTION:

For a closed tube, resonance occurs at tube lengths of an odd multiple of one-fourth wavelength, i.e. at $\lambda/4$, $3\lambda/4$, $5\lambda/4$ etc.

SUGGESTIONS:

1. Find the positions of the water level in the tube for the first three of these resonances. Use these readings to calculate the speed of sound, $v = |\vec{v}|$. Initially have enough water that you can raise the level above the first resonance position. The tuning fork frequency is on the fork.

   Since the effective end of the resonance tube is not at the tube's end, **do not use the position of the tube's top** in your calculations, but rather **take differences between the other readings**.

2. Sound waves in gases have a speed $v = \sqrt{\gamma RT/M}$. (Recall the formula for the speed of sound on a string, $v = \sqrt{T/\mu}$ (e.g., Lab SC-1)). Correct your value of v to 0°C (T = 273.16 K) and compare with that accepted for **dry** air at 0°C: 331.29 ± .07 m/s, [Wong, *J. Acoust. Soc. Am.*, **79**, 1559, (1986)]. For humid air see 3. below.

3. We quantify proportions in gas mixtures by the pressure each gas contributes to the total pressure. This is called the "partial" or "vapor" pressure. Think of the speed as resulting from an average $< \gamma/M >$,

$$< \gamma/M > \;=\; [(\gamma_a/M_a)P_a \;+\; (\gamma_w/M_w)P_w]\,/(P_a + P_w)\,,$$

   so that

$$v_{dry} \;\cong\; v_{humid}\sqrt{(\gamma_a/M_a)/ < \gamma/M >}\,,$$

   where $\gamma_{air} = 1.40, \gamma_w = 1.33, P_a$ is the partial pressure of air, P_w is the vapor pressure of water, $M_a \sim 29$ kg and $M_w = 18$ kg.

   How should the v.p. of water, P_w, in the tube affect the speed?

   OPTIONAL: Humidity changes will affect tuning of what musical instruments?

4. What effect does atmospheric pressure have on the velocity of sound in dry air? (Assume air at these pressures is an ideal gas.)

5. Viscosity and heat conduction in the tube may reduce **v** by ~0.1%. See N. Feather, "The Physics of Vibrations and Waves", Edinburgh Univ. Press, (1961), p. 110-120; this reference also has a delightful historical account (including Newton's famous goof).

Part III
Light

LC-1: Diffraction and Interference

OBJECTIVES:

To observe diffraction and interference and to measure the wavelength, λ, of laser light.

APPARATUS:

Optical bench; Diode laser assembly; two Pasco accessory disks; short focal length lens; screen; Pasco Interface with light and rotation sensors, mounting bracket, light aperture module
Interference demonstrations: optical flats (2), Newton's rings, 18 mm gauge blocks (2), interferometer & Na lamp.

INTRODUCTION:

The diode laser provides plane light waves of wavelength 670($\pm$10) nm. The waves in a perpendicular cross section of the beam are in phase (i.e. the light is said to be "coherent"). Any finite plane wave will spread by diffraction. The spreading is rapid if the beam is narrow, e.g. after passing the narrow slit in Part I below. If we illuminate two closely spaced narrow slits (narrow relative to the slit to slit spacing) by the same laser beam, the two spreading beams will overlap and interfere: Part II.

> *CAUTION:*
> The laser is a very bright source. Do not allow the laser beam to enter the eye and do not point the beam at anyone!

Experiment I: Single Slit Diffraction:

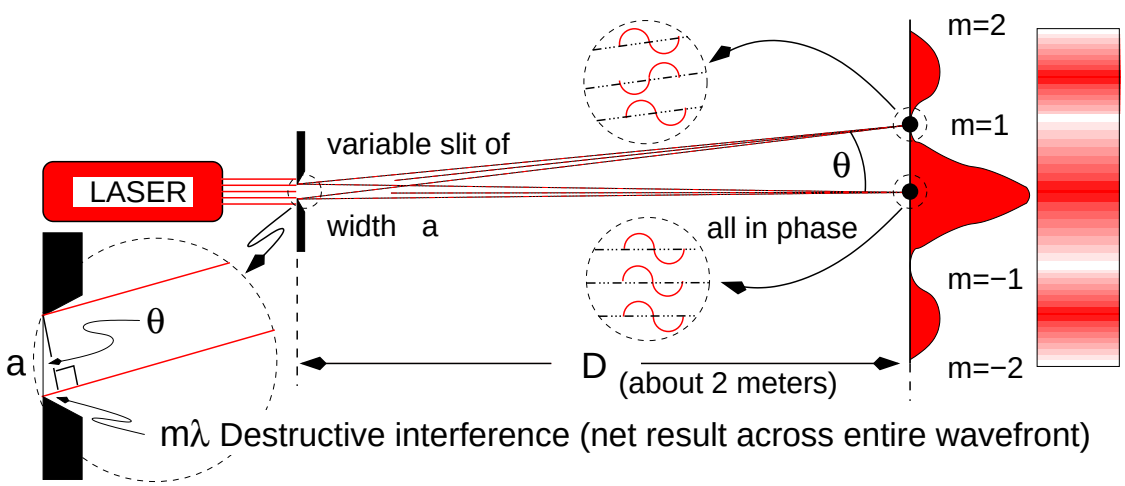

Figure 1: Schematic of single slit diffraction

THEORY:

The angular separation in *radians* of the first minimum from the center of the pattern is

$$\theta = \lambda/a$$

where a is the width of the slit. (For your derivation you may refer to the text and remember that for small θ, $\sin\theta \cong \theta$).

SUGGESTED PROCEDURE:

1. Mount the laser and variable width slit on the optical bench as shown in Fig. 1. Observe the pattern on the supplied white screen and qualitatively explain why in your lab book that the first *minimum* occurs as shown in Fig. 1 at $m = 1$.

   QUESTIONS:

   Q1. Qualitatively, how does the pattern vary as the slit width narrows (i.e., rotate the wheel)?

   Q2. Qualitatively, how do you expect the pattern vary if the wavelength, λ, could decrease from red to blue-violet?
   Click on the Single Slit Diffraction link immediately below (web-version only) to test your prediction.

2. To enable more *quantitative* observations the PASCO interface module has been configured to provide an Intensity (0 to 100%) vs. Linear position of the light sensor plot and table. Launch the experiment by CLICKing on the telescope icon below (web-version only). After the PASCO experiment window pops up, start the data acquisition by CLICKing on the START icon and move the combined light and rotary motion sensor in the lateral direction *gently and smoothly* by hand. Practice starting on one side of the diffraction pattern and move smoothly towards the other.

3. Configuring and aligning the optical components is very important! The laser light should fully illuminate the wheel pattern.
   There are two aspects for configuring the light sensor: aperture size and detector gain. Using a larger aperture lets more light reach the detector (Note: the laser diode intensities can vary from one set up to another). How does this affect the image profile? A larger gain increases the sensor output but can more easily saturate the output at maximum and increase the noise. *Adjust and record the gain setting which give you reasonably good results. Ask your instructor for help.* There are four simple steps: 1) CLICK on the SETUP icon 2) DCLICK on the yellow light bulb icon (or Light Sensor) 3) In the Sensor Properties window click on the "Calibration" tab and 4) CLICK on Sensitivity pull-down menu. Ask your instructor for a brief demonstration if you are at all uncertain.

4. Turn the PASCO wheel to a single slit width of a=0.1 mm.

5. Using the cross-hair feature of the PASCO graph display, measure θ (from y/D) for m= 1 and -1 plot m vs θ. From the slope and known value of a, calculate λ. Is your value of λ comparable with the state value of the diode laser?

Experiment II: Two-Slit Interference

For double slit interference, shown in Fig. 2, the distance y to the mth bright fringe from the midpoint, $y = 0$, is

$$y = D \tan\theta \cong D\theta \qquad \text{and} \qquad \theta \cong m\lambda/d$$

Hence

$$\lambda \;=\; yd/mD,$$

(For more information refer to the text and recall that for small θ, $\theta \cong \sin\theta \cong \tan\theta$.)

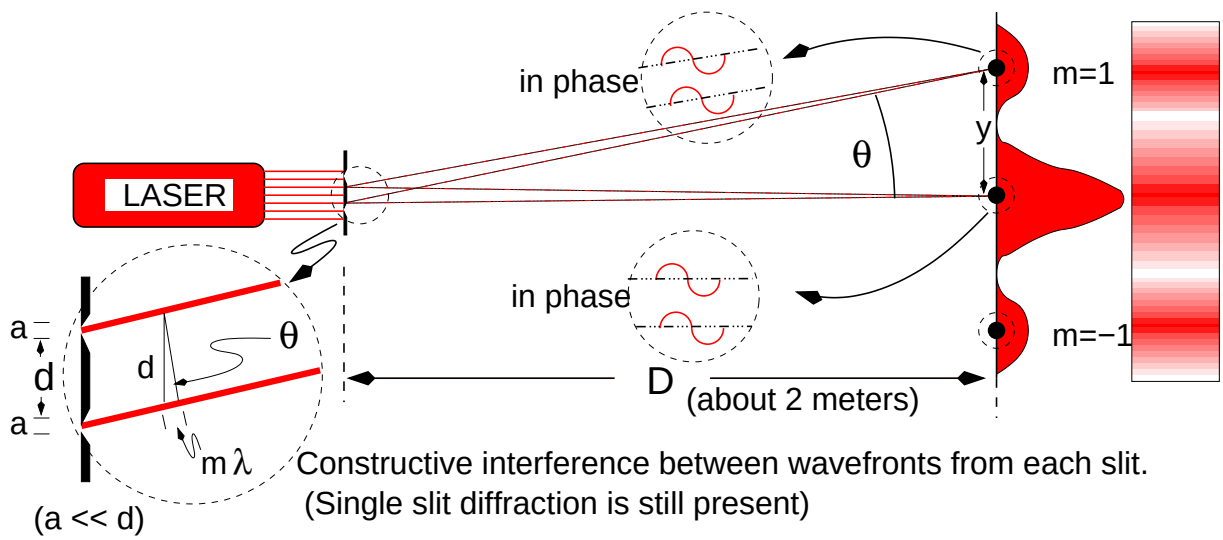

Figure 2: Schematic of double (or multiple) slit interference.

SUGGESTED PROCEDURE:

1. Mount the slide containing the four electroformed slits in the slit holder (or rotate the PASCO wheel) and illuminate one of the slit pairs with the diode laser.

2. Note the difference in pattern and spacing of the resulting interference fringes on the screen. From Experiment I you know that individually these slit exhibit diffraction effects. Thus you will observe both (i.e., a combination of single and double slit diffraction) interference effects in all patterns. Observe the interference pattern for four slit pairs.

3. Choose one pattern for careful measurement and measure the separations between a number of adjacent maxima (m= -1, 0, 1, etc.) and calculate λ using the same general procedure as experiment I.

4. Compare you calculated result with the stated value.

Experiment III: Fresnel Bright Spot and Other Interference Patterns

INTRODUCTION:

The Fresnel bright spot (also called Poisson's bright spot) is a bright spot in the center of the shadow cast by every circular obstacle in the path of a plane wave. The effect is implicit in Fresnel's representation of a coherent plane wave by half-period zones (e.g. see Shortley and Williams, "Elements of Physics" 5th ed. p. 737 or, if this is the web-version, see this example at http://www.physics.ucla.edu/ dauger/fresnel/PoissonAragoStory.html), but was first pointed out by Poisson (a disbeliever in the wave theory) in an attempt to ridicule Fresnel's wave theory. Arago subsequently showed experimentally that the spot existed. You, too, may demonstrate the spot:

1. Rotate and adjust the PASCO Slit Accessory wheel to illuminate the circular obstacle in the laser beam.
2. To obtain a large enough coherent plane wave it may be necessary to diverge the laser beam by placing the short focal length lens directly in front of the laser.
3. Carefully align laser plus lens and obstacle to center the shadow along the beam axis. The coherently illuminated area (the plane wave) should be several times the area of the obstacle. Proper alignment may help significantly in "cleaning up" the image.

OPTIONAL:

Diffraction from a small circular opening: By analogy with the Fresnel bright spot in a circular shadow, you might expect a dark spot centered in the image of a circular opening. In this case the situation is more complex: the on-axis Fresnel bright spot in the shadow results from superposition of a large number of higher Fresnel half-period zones whereas the light from a small circular aperture comes only from a few low Fresnel half-period zones whose superposition on axis may result in either a dark or bright spot: Dark for an even number of zones, bright for an odd.

Test this using the 2 circular apertures on the PASCO Slit Accessory wheel. Illuminate the hole with the diverged laser beam in the same manner as described above. By varying the hole size and/or distance from hole to screen you may change the small number of half-period zones contributing and hence see the central point on axis as either a bright or a dark spot, e.g. see Fig. 13 Shortley and Williams, p. 740. Again careful alignment is important to obtain a clean symmetric image.

If time permits you may find it interesting to view the four addition two-dimensional diffraction patterns.

DEMONSTRATIONS ON THE DISPLAY TABLE:

A. Interference between optical flats, gauge blocks, etc.
B. Newton's rings
C. Michelson's interferometer

LC-2: Mirrors and Lenses

OBJECTIVES:

To study image formation and focal lengths of mirrors and lenses.

APPARATUS:

Optical bench; optical components (10) kit: lenses & mirrors (5), telescope, illuminated arrow light source & 12V power supply, sharply pointed rod, desk lamp, white card or screen, plane mirror.
NOTE: *the objects on the optical bench slides are not necessarily centered with respect to the index on the slide.*

INTRODUCTION:

We will design, test and then measure mirror and lens assemblies by several techniques. In all instances it will be possible to use a simple interactive Java applet to perform a virtual pre-lab exercise. For the physical set-ups it will require testing location of image by absence of *parallax*, and others require *focusing a telescope for parallel rays*. For both techniques see Appendix D.) on page 119. Please master this material: your instructor is available for help.

Experiment I. Radius of curvature and focal length of a concave mirror:
VIRTUAL PRE-LAB:

1. If using the web-lab manual launch the virtual application by clicking on the Concave Mirror Application button below.
2. After clicking on "Start Me" you should observe a concave mirror, an object and its image. On the lower left corner is a cursor position readout.
3. With respect to the figure below and the mirror equation. Find the focal length.
4. Adjust the object to get $p = q$, and obtain the focal length again.
5. Move the object so that $p = f$. Do you see an image?
6. Move the object so that $p < f$. Is there an image? Is it real or virtual? Is the image height smaller or larger than the object?

The Mirror Equation is given by:

$$\frac{1}{p} + \frac{1}{q} = \frac{2}{R} = \frac{1}{f}$$

where f is the focal length and R is the mirror radius curvature. Note that when the object and image are equally distant from the mirror, $p = q = R$. You can use this condition to get an approximate value for R and f.

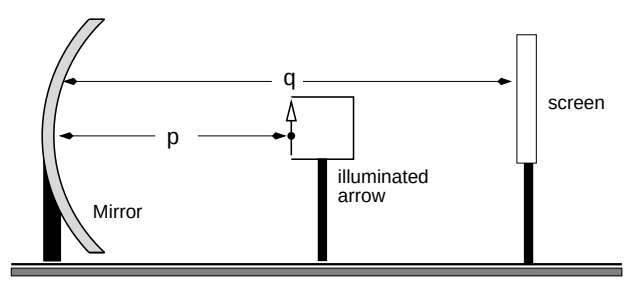

Figure 1: Layout of concave lens experiment.

SUGGESTED PROCEDURE (Note: The mirror holder contains a concave and a convex mirror on opposite sides. Be sure you use the *concave* mirror!)

I. By using object and image distances:

1. Resolve the image of the illuminated arrow formed by the concave mirror on the white card. Experiment with varying object distances, p, until you able to follow how the image distance, q, varies with the object distance.
2. Measure the image distance at several different positions of the illuminated arrow object. From each pair of conjugate object and image positions calculate f for the mirror. Make a table of the results in your lab book, but leave space to compare with the results of II. and III. below.

II. Obtaining $f = R/2$ by imaging at center of curvature ($q = p = R$): Replace the illuminated arrow and screen with the rod and place the rod at R. If the tip of the rod is at the center of curvature, a real inverted image will appear just above it with the tip and its image coinciding. An absence of parallax (see Appendix D.)) between the tip and image is the most sensitive test for coincidence. When the *parallax vanishes*, the distance between the tip and the mirror is the radius of curvature R. From several determinations of R, (switching roles with your lab partners estimate the reliability of your results.)

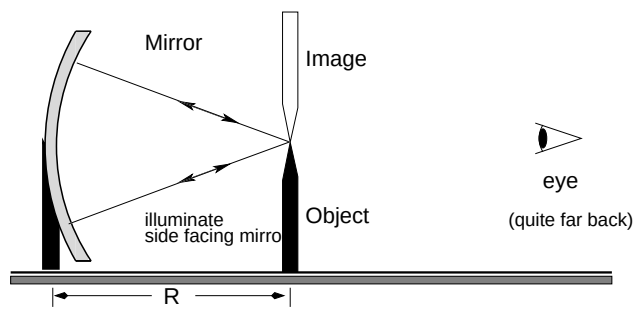

Figure 2: Object and image at center of curvature, R.

III. By placing object at the principal focus ($p = f$): If the tip of the rod is at f, rays from the tip will reflect from the mirror as a *parallel* bundle and give a sharp image of the tip in a telescope *focused for parallel rays* (see appendix D). Keep the distance between tip and telescope small or the reflected light may *miss* the telescope. The best test for locating the focal point is *absence of parallax between the tip's image and the cross hairs* in the telescope, but the telescope *must* already be focused for parallel rays (e.g., focus on something out the window). From several settings estimate the reliability of your f measurement.

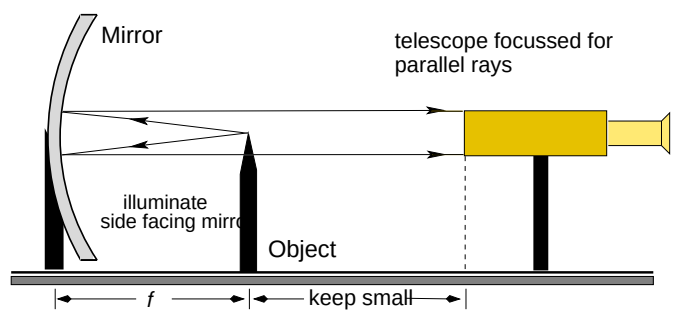

Figure 3: Object at f, image at infinity.

Experiment II: LENSES

VIRTUAL PRE-LAB:

1. If using the web-lab manual launch the virtual application by clicking on the Converging Lens Application button below.
2. After clicking on "Start Me" you should observe a convex lens, an object and its image. On the lower left corner is a cursor position readout.
3. With respect to the figure below and the lens equation. Find the focal length.

4. Move the object so that its inverted image has the same height. Find the focal length at this point.
5. Move the object so that $p = f$. Do you see an image?
6. Move the object so that $p < f$. Is there an image? Is it real or virtual? Is the image height smaller or larger than the object? What is the sign of q?

---

1. *Converging lens with short focal length*:

   From the thin lens formula

$$\frac{1}{\text{object distance}} + \frac{1}{\text{image distance}} = \frac{1}{p} + \frac{1}{q} = \frac{1}{f}$$

   Measure f using the three methods diagrammed below (by adjustments in the object distance). Compare the results from the various methods.

   I.

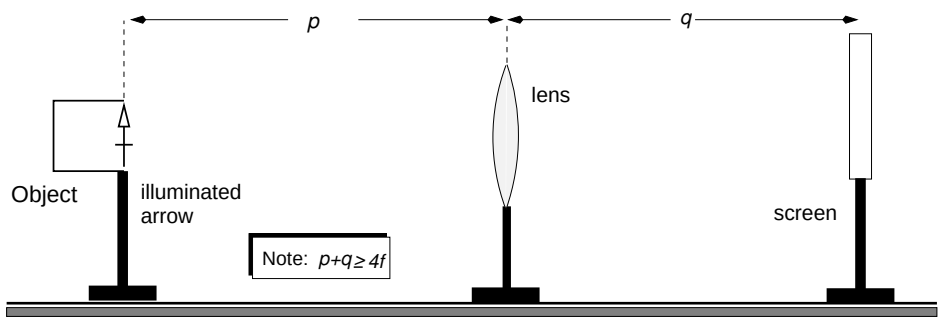

   II

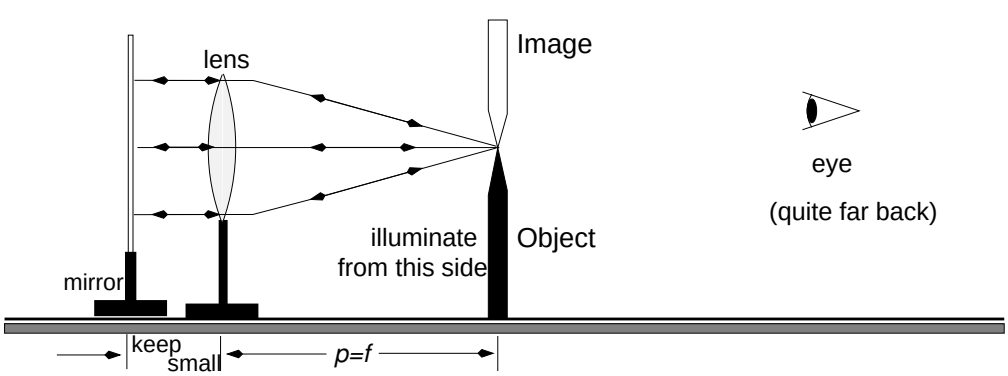

   III. OPTIONAL

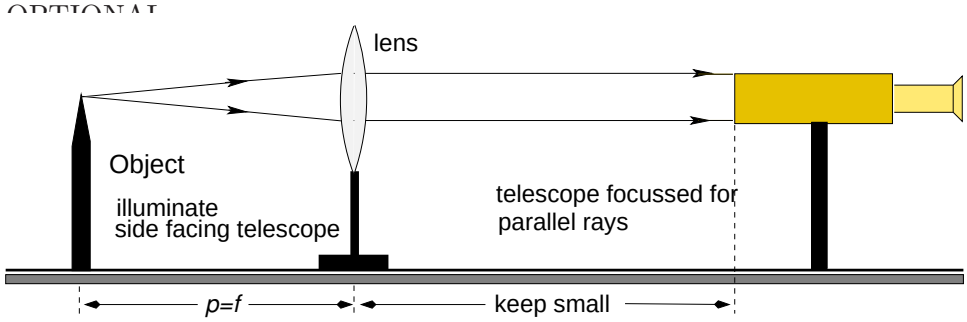

2. *Focal length of a diverging lens*:

   Since the image is always virtual it is necessary to combine it with a converging lens and configured so that the final image is real.

VIRTUAL PRE-LAB:

1. If using the web-lab manual launch the virtual application by clicking on the Diverging Lens Application button below.
2. After clicking on "Start Me" you should observe a concave lens, an object and its virtual image. On the lower left corner is a cursor position readout.
3. With respect to lens equation and starting positions, find the focal length. Can you find an object distant in which the image height and object height are the same?
4. Now restart the simulation with a combination of a convex and concave lens by clicking on the "Add 2nd lens" link.
5. This 2nd lens will render a final image which is real. The image with a "1" by it is that of just the convex lens while the image with a "2" next to it is that of the pair. Move the object and alter its height, if necessary, so that the first image has the relationship $q_1 \approx 2p_2$. (In this simulation $|f_2| = 3|f_1|$ and qualitatively resembles the figure shown below.)
6. Now repeat the last step with $|f_2| = |f_1|$ by clicking on the "Another 2nd lens" link. Finally reset to the "Another 2nd lens" and then click on the *convex* lens and drag it past the diverging lens.

I. Use the set-up sketched below. First adjust Lens_1 so that with Lens_2 removed, $q_1 \sim 2p_1$. Measure q_1, insert the diverging Lens_2 reasonably close to Lens_1 and then locate the new image distance q_2. From $p_2 = d - q_1$ (a virtual object) and q_2 calculate f_2.

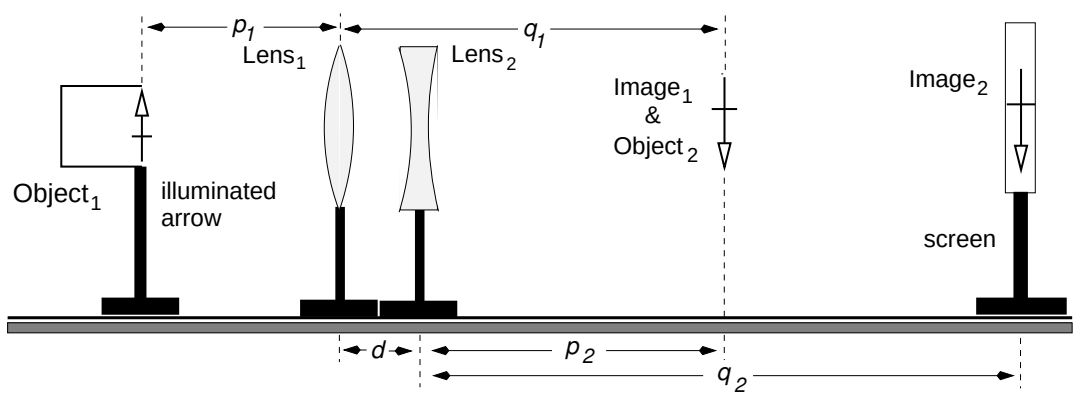

II. OPTIONAL: Find f_2 by this more sensitive method: With the pointed rod as object now detect the image by a telescope focused for parallel rays. (As shown in the following figure.)

If using the web-lab manual, launch the virtual application by clicking on the Dual Lens Test Application button below to obverse a point source in action.

To align all the objects: tape a piece of paper with a lot of markings on it to the pointed rod. Look through the telescope and move the diverging lens forward and backward until you can see some markings clearly in the telescope. Then move the rod up or down, as necessary, and rotate the telescope from side to side, as necessary, until you can see the tip of the pointed rod. Then move the diverging lens a small amount until the tip is in focus.

As a last step you will move the pointed rod (i.e. vary p_1 and hence q_1) until a sharp image appears in the telescope with *no parallax* relative to the cross hairs. (This occurs only if parallel rays leave the diverging lens.) The image from the converging lens at q_1 serves as a virtual object for the concave lens, Lens$_2$. After properly adjusting p_1 this virtual object will be at the focal point of the diverging lens, Lens$_2$. Obtain q_1 by setting p_1 and using the known value of f_1. (Make sure that q_1 is large enough to accommodate $d + |f_2|$). Now look for the image in the telescope and adjust p_1. Note that since $q_2 = \infty$, $f_2 = p_2$ and $p_2 = d - q_1$.

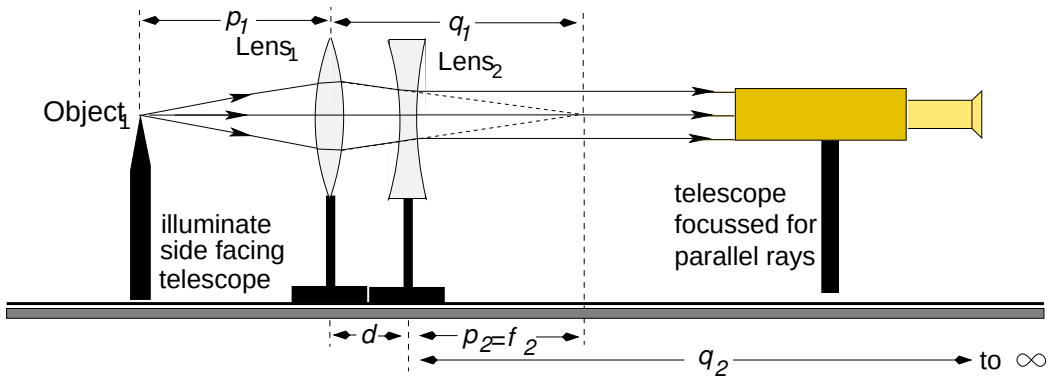

OPTIONAL

Experiment III: Focal Length of a Convex Mirror

Once again, since convex mirrors give virtually images it is necessary to study the mirror in combination with a converging lens.

Measure the focal length of the *convex* mirror by combining it with a converging lens. Set the pointed rod at twice the focal length of the lens ($p_1 = 2f_1$). Next adjust the mirror position until the inverted image position shows no parallax with the object. Then $R = d - 2f_1$ and

$$f_{\text{mirror}} \;=\; f_2 \;=\; R/2.$$

Of course the lens must have $f_1 > f_2$, so use a long focal length lens.

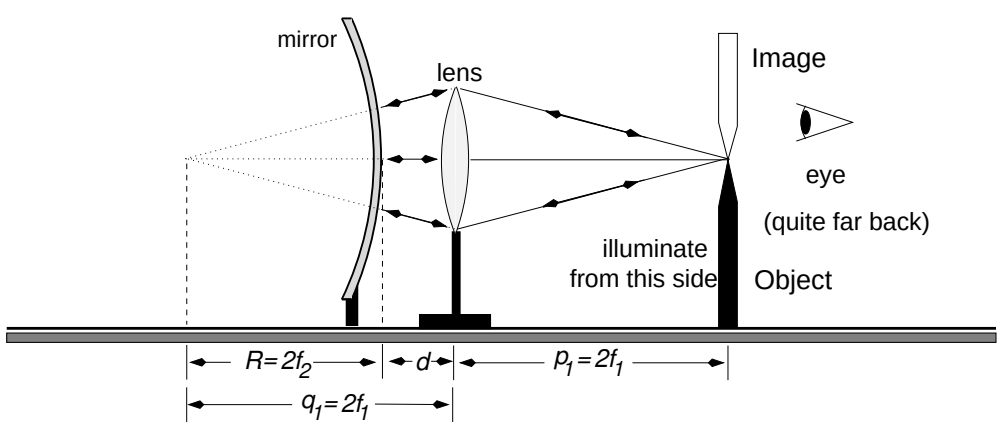

L-3: Optical Instruments

OBJECTIVE:

To construct a number of optical instruments and measure magnification.

APPARATUS:

Identical to the of L-2 plus white board, achromatic doublets, Ramsden eyepiece.

SUGGESTION: In constructing an optical instrument catch the real image formed by the first lens on paper. This location can tell where the next lens goes; e.g. for a telescope or microscope place the next lens slightly less than its focal length beyond the first image.

EXPERIMENTS:

1. *Inverting Telescope*

   A. First measure the f of a weak converging lens ($25 \leq f \leq 50$ cm) and of a strong converging lens ($f \sim 5$ cm). The first lens (f large) typically has the virtue of intercepting and focusing a fairly large area of light while the second lens can be positioned to give a large virtual image (and hence magnification.) Notice that if the first image, $q_1$is at a point $p_2 > f_2$ with respect to the second lens you get a real, erect second image. If you are using the web-based lab manual and desire a demonstration, click on the Inverting Telescope Demo button immediately below.

   Use you will use these two lenses to construct an astronomical (inverting) telescope. As an object, use the white board and scale while illuminated by a bright light. As a procedure for measuring the magnification, vary the space between the objective L_1 and the eyepiece L_2 until the virtual image I_2 of scale S seen through L_2 lies in the plane of S (i.e. $p_1 + d = |q_2|$). As a sensitive test of this there should be no parallax between the scale as seen directly by your eye 2 and the scale image seen by eye 1 thru the telescope as shown in Fig. 2. Generally a person will adjust the eyepiece so that the virtual image appears at the distance of most distinct vision (∼25 cm).

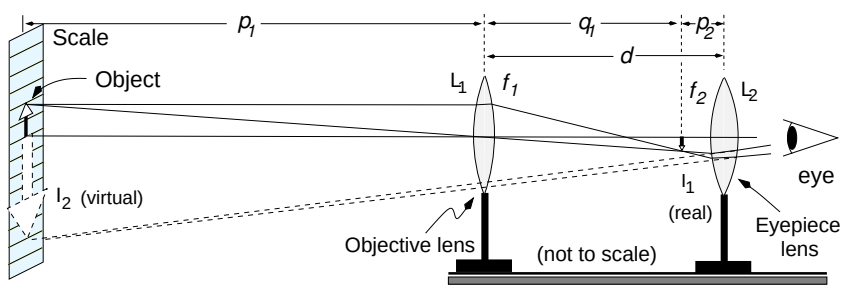

Figure 1: The inverting telescope (not drawn to scale).

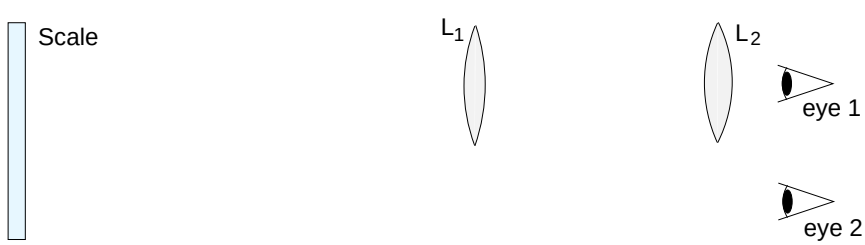

Figure 2: View scale with one eye, then the other.

B. Adjust the telescope direction until these images superimpose (as in Fig. 3). The number of divisions on the scale as viewed directly (by eye 2) which fall in one division of the image as seen through the telescope (by eye 1) is clearly the magnifying power of the telescope.
Compare your measured magnification M with that calculated for an astronomical telescope, namely $M = f_1/f_2$ where f_1 is the focal length of the objective and f_2 that of the eye piece. Why are the two different? Calculate the magnification from the actual measured object and image distances. Compare with the measured M.

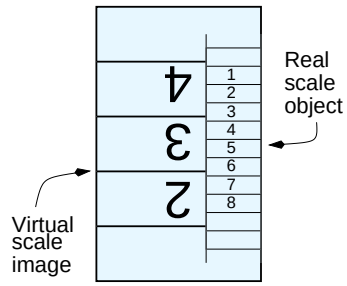

Figure 3:

2. *Erecting telescope*

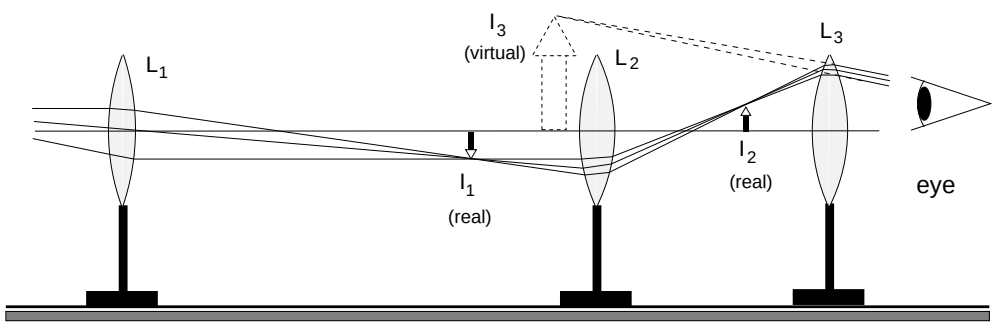

Figure 4: Configuration of a three lens erecting telescope.

A. Measure the focal length, f, of a second strong converging lens and use it as the inverting lens L_3 (Fig. 4) to form an erecting telescope. L_2 must be adjusted to give a real image, I_2. Notice that varying the space between I_1 and the inverting lens L_3 changes the magnification. If you are using the web-based lab manual and desire a demonstration, click on the Erecting Telescope Demo button immediately below. In this simulation your are now able to readjust both the positions and focal lengths!

B. What position of the inverting lens makes the shortest possible telescope, (i.e. it makes the distance between I_1 and I_2 a minimum)?

3. *Simple microscope or magnifier*: Experiment with one of the strong converging lenses as a magnifier until you can make the virtual image appear at any distance you choose: vary the object distance from zero to the focal length. The parallax test described in Part 1 will enable you to locate the virtual image. When the parallax between the object and the virtual image (seen through the lens) vanishes, the object and virtual image are in the same plane.

4. *Compound microscope:* Use the two strong converging lenses to form a compound microscope.

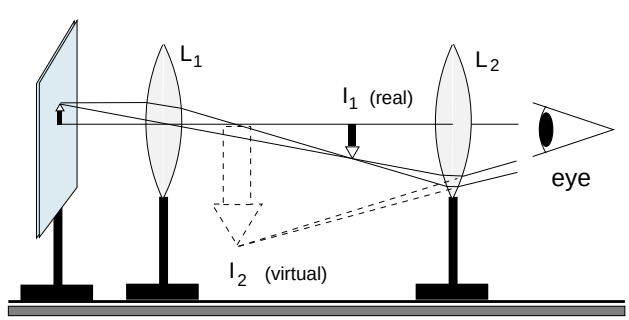

Figure 5: Setup for compound microscope.

5. *Galilean telescope (or opera glass)*: Make use of the weak converging lens and a strong diverging lens.

OPTIONAL:

1. *Ramsden eyepiece*
   A. Ask the instructor for the holder containing a Ramsden eyepiece, a crosshair, a diaphragm, and an objective lens. See Fig. 6.

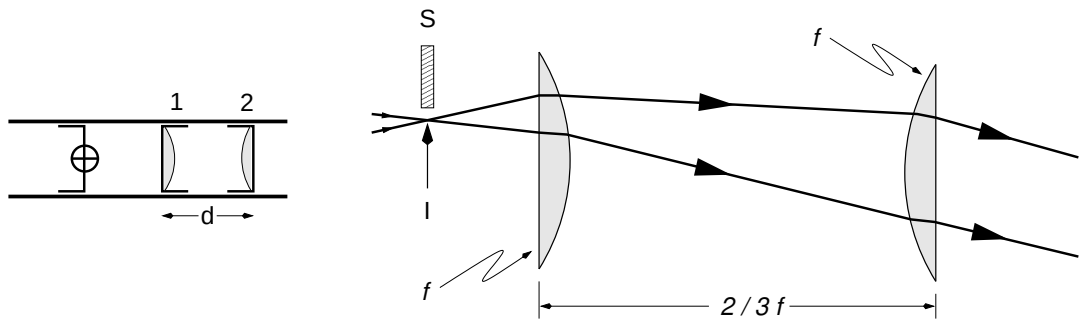

Figure 6: Construction of a Ramsden eyepiece.

The Ramsden eyepiece consists of lenses 1 and 2, plano-convex lenses of $f =$ 85 mm. Spherical aberration is less than for a single lens because the ray bending is spread over four surfaces. It is a minimum if the curved surfaces face one another as shown. (In addition if the two lenses were their focal length apart, chromatic aberration would be a minimum. But, since dirt specks on lens 1 then would be in focus, lenses 1 and 2 are usually set $2f/3$ apart). The tube also contains an objective lens to convert the tube into a telescope or microscope.

   B. Use the Ramsden eyepiece with $d = 2f/3$ in the telescope and microscope. Note improvement in image over that of a single eyepiece lens. Adjust eyepiece for a sharp image of the cross hairs. Then move the objective lens until the image shows no parallax with respect to the cross hairs.

2. *Huygens eyepiece*: A common eyepiece in which the image (and hence cross hair) is within the eyepiece. It also employs two plano-convex lenses but both convex surfaces are toward the incident light. Minimum lateral chromatic aberration exists for a separation of $(f_1 + f_2)/2$. Usually $f_1 \sim 3f_2$.

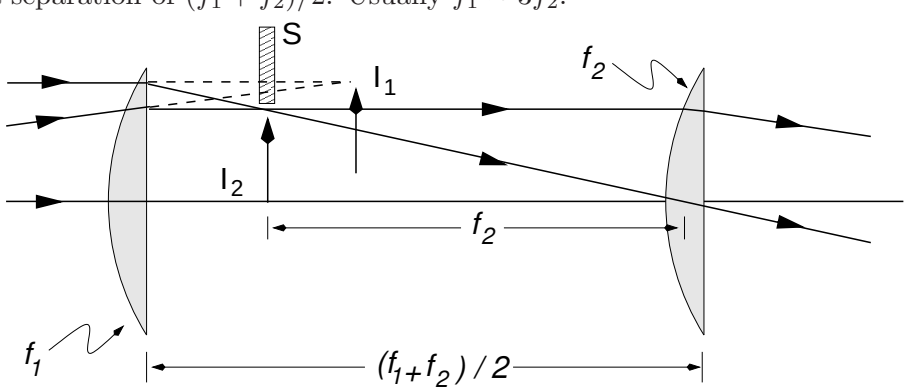

Figure 7: Construction of a Huygens eyepiece.

3. *Eye ring.*

   A. Point the astronomical telescope at a lamp and explore with a screen the illumination back of the eyepiece. [Or remove diaphragm from telescope or microscope of optional (1)].

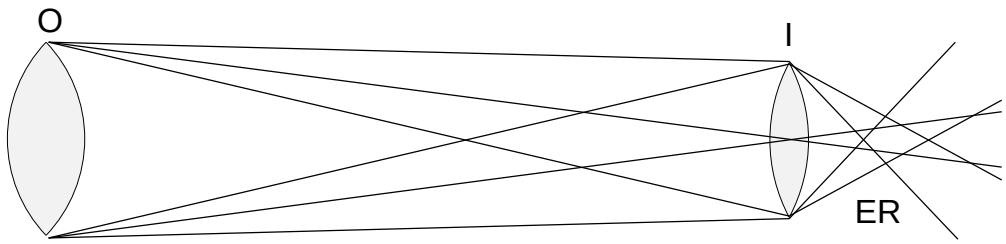

Figure 8: Position of eye ring.

   The light coming through the telescope has a minimum cross section at ER. This area ER is the image of the objective formed by the eyepiece. Obviously all light which gets through the telescope must go through this image, and thus ER is the best spot to place the pupil of the eye. Hence the name "eye ring".

   Note that if one places a diaphragm with aperture appropriately larger than the eye ring a little ahead of the eye ring, then an observer looking through the aperture would position the pupil of her/his eye on the eye ring.

   B. Using the Ramsden eyepiece, place the diaphragm at the appropriate distance in front of the eye ring. Note the improvement in the ease of observing through it, especially for the compound microscope.

4. OPTIONAL telescope: Use an achromatic objective lens, of long focal length and a commercial Ramsden eyepiece (from instructor). Note the quality of the image.

5. OPTIONAL microscope: Use a short focal length achromatic objective and a commercial Ramsden eyepiece (from instructor). Note the quality of the image.

   It is interesting that one does not need an achromatic eyepiece because the virtual images for red and blue, though at different distances (e.g., red at 2 m, blue at $\sim \infty$), subtend almost the same angle at eye. As a result the eye doesn't notice the aberration.

L-4: The optics of the eye and resolving power

OBJECTIVES:

To study eye optics and how resolving power depends on aperture.

APPARATUS:

PART I: Eye model, (fill with distilled water to simulate the aqueous & vitreous humors); light source, lens set, 6“ plastic ruler.

PART II: (2) Optical benches, Na lamps, transparent mm slides, vernier calipers, L-2 telescopes; (1) 15 meter tape.

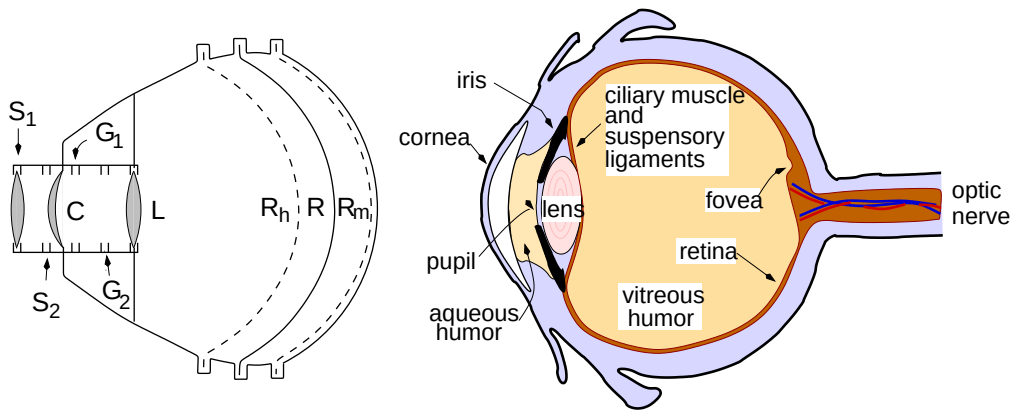

Figure 1: Various schematics for the eye

You may fix the moveable retina (cylindrical) in one of three positions:

R for the normal eye,
R_h for the hypermetropic (farsighted) eye,
R_m for the myopic (nearsighted) eye.

(An eye retina is actually spherical, but for small images the results are similar.)

The eye model has a **fixed cornea C** and racks for other lenses.

A lamp box serves as source for most of the experiment.

Set of lenses: (Strength in diopters = 1/f where f is in meters.)

	Diopters	**Focal lengths in air**
1. Converging spherical	+ 7.	0.14 m
2. Converging spherical	+20.	0.05 m
3. Converging spherical	+ 2.00	0.50 m
4. Diverging spherical	- 1.75	-0.57 m
5. Diverging cylindrical	- 5.50	-0.182 m
6. Converging cylindrical	+ 1.75	0.57 m
7. Diaphragm with small hole	.	.

PART I - EXPERIMENTS WITH THE EYE MODEL

1. ACCOMMODATION: With the retina in the normal position, point the eye model at a window or other bright object 4 to 5 meters away. Insert the +7 diopter lens in the water at the inside mount farthest from the cornea. An image of the bright object should be in focus on the retina.

   Next use as object the lamp box and place it about 30 cm from the cornea. The image is blurred until one replaces the +7 diopter lens by the +20 diopter lens. This change illustrates accommodation. Eye muscles make the lens thicker for close vision. (Under relaxed conditions the ligaments supporting the lens are in radial tension and hence thin the lens. The ciliary muscle contracts against these ligaments allowing the lens to thicken for viewing near objects. See Fig. 1.)

2. NEAR and FARSIGHTEDNESS (MYOPIA and HYPERMETROPIA): With lamp box at 30 cm and the 20 diopter lens at L, place the retina in the position R_m. Decide which lens placed in slot S_1 or S_2 will bring the image into focus. Try it.

   Make the eye *farsighted* by moving the retina to R_h, and pick the proper lens to place in front of the eye to bring the image into focus.

   Focus again on a window 4 to 5 meters away when the +7 diopter lens is in the *normal* position L and the retina in position R.

   Make the eye *nearsighted* by moving the retina to R_m. Decide which lens will bring the image into focus. Try it.

   Remove the correcting lens; the image again blurs. At S_2 place the diaphragm with hole and note image improvement. With sufficient light try a smaller hole (e.g. a hole thru masking tape on the diaphragm). Explain the effect of the reduced aperture.

3. ASTIGMATISM: With the +20 diopter lens at L in the eye and the retina in the normal position, adjust the distance to the lamp box to get a sharp image on the retina. Then produce astigmatism by placing the strong diverging cylindrical lens in mount G_1. (In the human eye astigmatism generally results from a cornea with different curvatures in the horizontal and vertical directions.) Turn this lens and note the effect on the image.

   Correct this defect by placing the converging cylindrical lens in front of the cornea and turning it to the position for which the image becomes sharp. Note the directions of the axes of the two cylindrical lenses. (*They are not necessarily aligned with the tab.*)

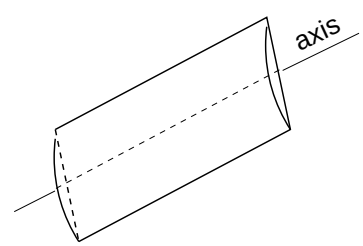

Figure 2: Cylindrical lens.

4. COMPOUND DEFECTS: Combine tests 2 and 3, i.e. make a nearsighted astigmatic eye. Correct by using both a cylindrical and spherical lens in front of the cornea. How is this double correction managed in actual spectacles?

5. CATARACTS and LENS REMOVAL: A cataract results from a cloudy lens. A cataract operation involves removal of the lens. An implanted plastic lens or a strong convergent lens in front of the eye restores vision. Remove the eye lens (L) of the model and place the +7 diopter lens in front of the cornea. A clear image reappears for nearby objects.

6. Action of a SIMPLE MAGNIFIER: With the lamp box at 35 cm, the +20 diopter lens and the retina in the normal position, measure the size of the image. Now place the +7 diopter lens in front of the cornea and move the lamp box toward the eye until the image becomes clear. Record the increased size of the image. With the lamp box at 35 cm, the 20 diopter lens and the retina in the normal position, note the size of the image. Now make the eye nearsighted and bring the lamp box toward the eye until the image becomes clear. Note the increased size of the image in the nearsighted eye.

NOTE: For a real eye and lens the index of refraction, μ, of the lens varies from 1.42 at its nucleus to 1.36 at its edges, and these values are not so different from those of the adjoining aqueous and vitreous humor ($\mu = 1.330$ and $\mu = 1.337$). Hence the real eye lens is very weak and is primarily for fine focus adjustment. Most of the refraction in the eye actually occurs at the cornea where μ changes from 1.0 (in air) to 1.37 in the cornea.

PART II - RESOLVING POWER

Before doing this part, read in your text about resolving power.

SUGGESTED EXPERIMENTS:

1. Use as a source a slide with mm divisions and illuminated by a sodium discharge lamp. The wavelength of the sodium yellow light is 589.3 nm.
2. Back away from the slide until the mm lines become indistinct. Then advance far enough so that they are just clearly visible; this procedure insures that eye defects or the density of rods and cones do not (for this measurement) limit the resolving power.

   Observing now with only one eye, place a vernier caliper[5] in front of the eye pupil with the caliper jaws parallel to the mm marks and open about 3 mm. Slowly close the jaws until the mm marks disappear. Note the separation of the jaws, w, and measure the distance, D, to the slide from the jaws.

   Compare your measurements of the angular separation α of the mm marks at your observing distance,
   $$\alpha = \frac{1 \text{ mm}}{D \text{ (in mm)}},$$
   with the expression $\theta = \lambda/w$ where θ is the angular limit of resolution, (Rayleigh's criterion).
3. Mount a telescope so its objective is at the same distance from the slide. Repeat the experiment with the caliper in front of the objective.[6] How do the results compare to your measurement without the telescope?
4. Move the telescope ≥ 4 m from the slide and repeat the experiment.
5. Turn the vernier jaws perpendicular to the mm lines and repeat experiment #1. Comment on the result.

QUESTIONS:

1. Would an eye without any defects of vision have better resolving power at dusk or in bright sunlight? Explain.
2. Discuss how a contact lens functions. Would a "soft" contact lens correct well for astigmatism?

---

[5] In all the following be sure you are not looking through the hole at one end of the jaws. It is advisable to cover the hole with masking tape.

[6] Be sure no light enters the telescope except through the slit jaws. (You may need masking tape on the caliper jaws to prevent this from happening.)

L-5: Spectrometer and the H Balmer Series

NOTE: Consult your instructor for assignment of parts suitable for a single lab, e.g. do Part I, II (A or B), Part IV or Part V).
OBJECTIVES:

To become familiar with a precision spectrometer and some of its uses.

APPARATUS:

Precision spectrometer; mercury and hydrogen discharge tubes; prism; diffraction grating; light source for Gaussian eyepiece & its 12V power supply (L-2); ring stand & achromatic lens.

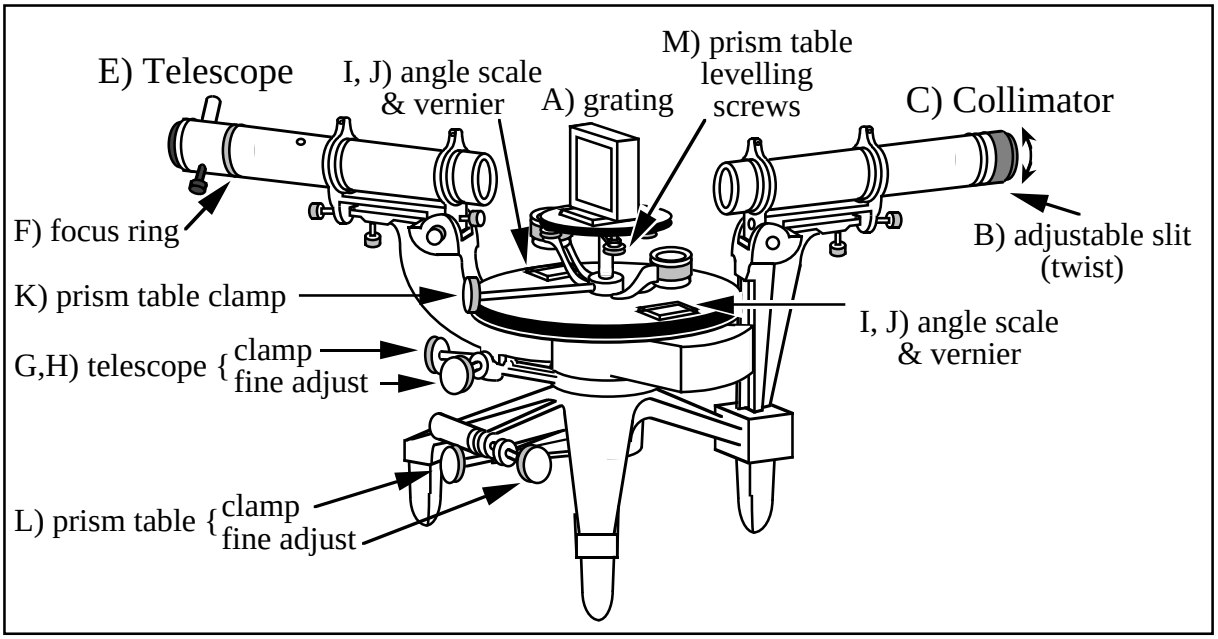

Figure 1: The spectrometer (side view).

INTRODUCTION and ADJUSTMENTS

PART I - A

1. Become familiar with the clamping and fine adjustment controls for telescope and prism table angles. **Never force a motion - you may damage the instrument. If at the end of a fine adjustment, loosen and reclamp!** The prism table clamp sets table elevation: no fine adjustment is necessary.
2. Note that 180° apart are two **angle scale reading ports and verniers, I and J**. The verniers have 30 divisions per half degree. Hence each division is $(1/30)\times(1/2) = (1/60)^\circ$ or one minute ($'$) of arc.
3. The **knurled ring about the collimator, B,** controls the **slit opening**.
4. Staff have already focussed the collimator for parallel light and have set collimator and telescope $\perp$ to spectrometer's rotation axis.

REMINDER ON READING A VERNIER

1) Position and tighten the telescope.
2) Move the magnifying glass to see the scale marking
3) Look where the zero mark on the upper scale is located. The degree reading is the first *full* degree mark to the *left* of the zero (210° in the top figure; 229° in the bottom figure).
4) Now make the *minute* reading: if the zero mark on the upper scale comes *after* a $\frac{1}{2}$ degree mark (the short lines on the lower scale) then start at $30'$, otherwise at $0'$.
5) Next look for the two lines which match up *best* between the two scales. Read the number of the appropriate line on the upper scale and add it to the zero mark is just past a $\frac{1}{2}$ degree mark so we begin with $30'$. The $15'$ mark is the one that lines up best so we get $210°15'$ for the top reading and $229°146'$ for the bottom one.
6) Now convert to decimal degrees, in this case $15/60 = 0.25$, so $\theta = 210.25°$. latex

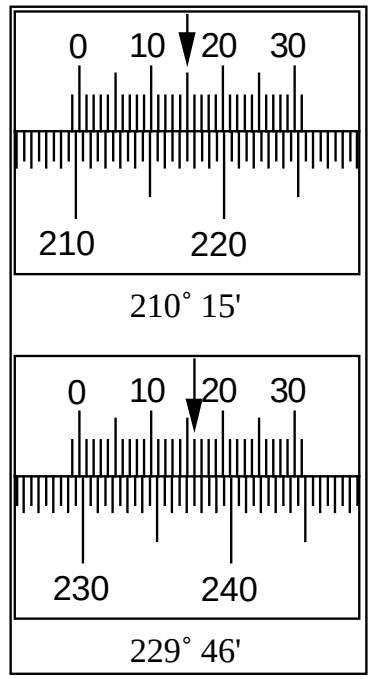

Figure 2: The verniers

PART I - B: FOCUS THE TELESCOPE FOR PARALLEL RAYS

1. i) Slide telescope eyepiece in or out until crosshairs are in sharp
   ii) Sight telescope at a distant object (thru an open window); then focus telescope by rotating its focus ring (Fig. 1) until the object's clear image falls on the cross hairs. The test for proper focus is absence of parallax between the image and cross hairs (appendix 4). The telescope, now focused for parallel rays, will stay so as long as the focus ring is unmoved; but one may still adjust the eyepiece to suit the observer.
2. An alternative method to focus for parallel light is to use the Gaussian eyepiece + light source as described below in PART II B.
3. With collimator and telescope both properly focused one should get a sharp image of the slit and no parallax between slit image and cross hairs. If you still get parallax, recheck your telescope focus and/or consult instructor.
4. *Optimizing light thru the collimator*: A properly located short focal length lens can gather a large fraction of the light from a source and redirect it

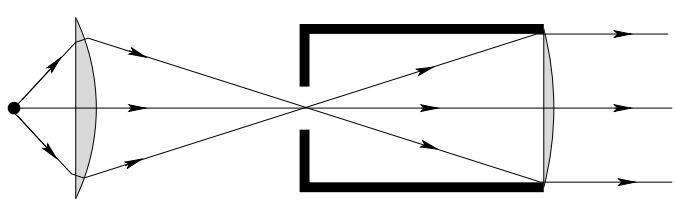

thru the collimator thereby facilitating detection of weak spectral lines. For strong lines it permits narrowing the slit width and thus improving resolution. Use such a lens (mounted on a ring stand) to find an arrangement which fills the collimator with light.

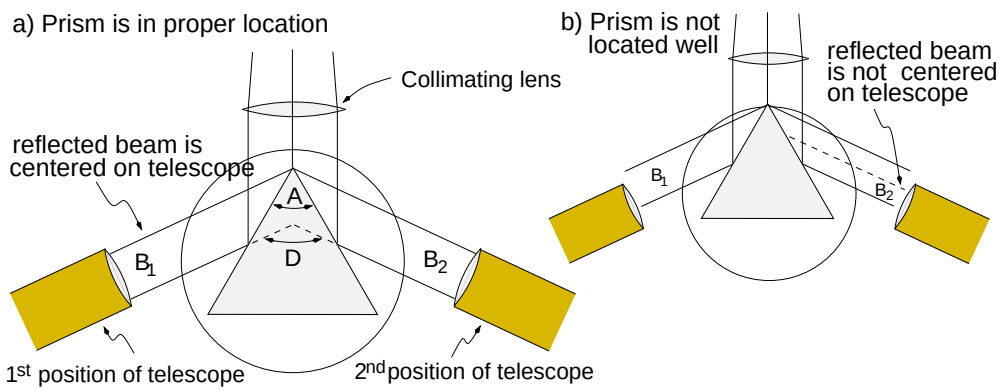

Figure 3: Proper, a), and improper, b) prism locations.

PART II-A: MEASUREMENT OF PRISM ANGLE

1. Mount the prism (in holder) on the dowel pins (in the prism table) so that the prism is far enough from the collimator that beams B_1 and B_2 are centered with respect to the spectrometer axis; otherwise much of the reflected light may miss the telescope. Turn the table so that the apex angle A (Fig. 3) splits the beam into nearly equal parts.
2. Using the *prism table levelling screws* adjust the plane of the prism table so it is close to horizontal.
3. With the prism table clamped at the proper elevation, set the telescope to receive beam B_1 and form an image of the slit on the intersection of the telescope cross hairs. **Record both VERNIER readings (in minutes)**. Average the two vernier readings (to eliminate any systematic error from misalignment of the circle scale with respect to bearing axis), and add the result to *one* of the angle scale readings. *Note that the angle scale reads in half-degree units and the vernier in minutes (***not** *in decimal degrees*!). The zero position on the vernier determines the angle to the nearest half-degree (30 minutes) and the vernier reads the number of minutes past the half-degree mark.
4. Then with telescope in the 2nd position, set on the slit image. The change in reading of the *same* angle scale should be the angle D. (See Fig. 3.) *Be sure you don't get the angle scales mixed up and subtract the first reading of angle scale 1 from a reading of angle scale 2.* Also some students incorrectly handle the subtraction when the scale passes through 360° or 0°.
5. OPTIONAL: Try to prove that angle D is twice the prism angle A.

PART II-B: ALTERNATE method for prism angle measurement using Gaussian eyepiece

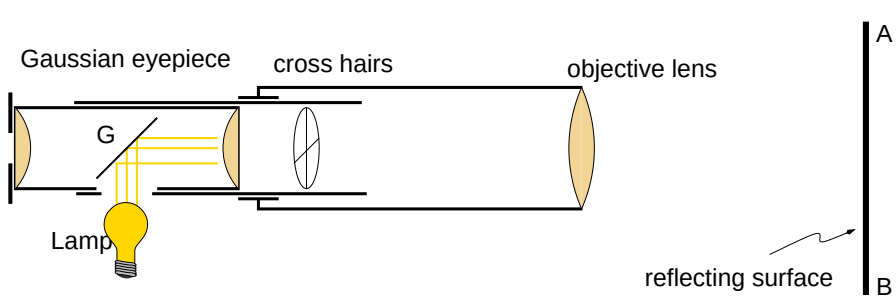

Figure 4: Spectrometer telescope

Introduction: The *Gaussian eyepiece* (Fig. 4) has a partially reflecting glass plate G set at 45° to telescope axis so that light from the lamp reflects down the telescope tube, past the cross hairs and out the objective. If in front of the objective you place a reflecting surface *perpendicular* ($\perp$) to the telescope axis, the light will reflect back into the objective and form a real image of the cross hairs. If the cross hairs are in the focal plane of the objective, their reflected image will form in the same plane. Thus both the cross hairs and the image will be in focus through the eyepiece. When one orients the reflecting surface so that the image coincides with the cross hairs, the reflector is accurately $\perp$ to telescope axis.

Thus the Gaussian eyepiece permits both focusing the telescope for parallel rays and setting a reflecting surface $\perp$ to the telescope axis.

1. To *focus the telescope for parallel light*:
   a) Rotate the Gaussian eyepiece to open the hole between reflecting plate G and lamp. Adjust eyepiece to give a sharp image of the cross hairs, but **don't turn the eyepiece to block the light hole**. Next, with prism on the table, adjust the prism table screws to make the table nearly horizontal.
   b) Now rotate the prism table until the prism face is approximately $\perp$ to telescope axis. Clamp the telescope and mount a light on the Gaussian eyepiece. (**Check that the light hole is still open**). With no illumination on the prism except that from the telescope, next rotate the prism table back and forth a few degrees until maximum reflected light appears in the eyepiece. Clamp the table in this position, and then focus the telescope (by turning the focus ring) until the reflected image of the cross hairs appears and shows no parallax with respect to the cross hairs. The telescope is now focused for parallel rays. Fine adjustments of the prism table leveling screws may help the images coincide and thus set telescope axis accurately $\perp$ to the reflecting surface. See Part VI, Sec. 3.
2. To find the prism angle set the telescope $\perp$ to first one prism face and then the other. The angle between these two positions is the supplement of the prism angle. See Part IIA for detail about angle readings.

PART III: INDEX OF REFRACTION

Introduction: When the path thru a prism is symmetric, the deviation is a minimum. At this angle of minimum deviation the index of refraction, n, is

$$n = \frac{\sin\left[(A+d)/\delta\right]}{\sin\left(A/2\right)}$$

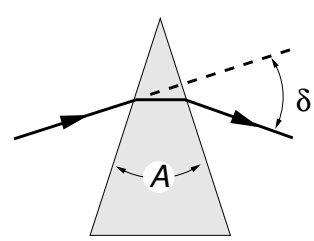

where A = angle of prism
δ = angle of minimum deviation
n = refractive index of the prism.

Devise your own methodology and determine the prism's refractive index for one or more lines of the Hg spectrum.

PART IV: CALIBRATION OF PRISM SPECTROSCOPE

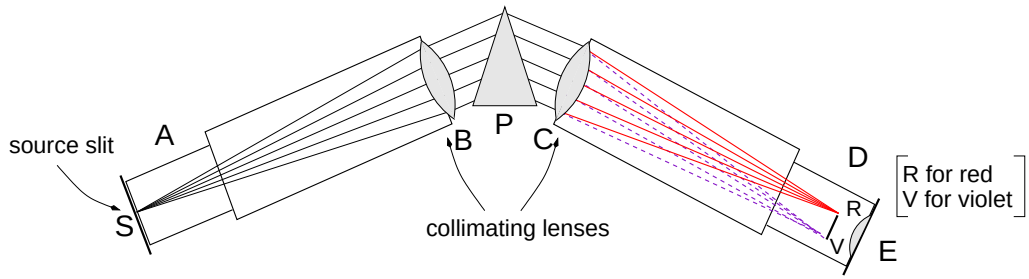

1. Set the prism for minimum deviation for a green line in the Hg spectrum.
2. Determine the angle readings for the yellow, green, blue-violet, and deep-violet Hg lines. Repeat this for the red line from a hydrogen discharge.
3. Plot telescope angle vs accepted λ's for these lines.
4. For the same setting of the prism table, find the angles for the blue-green and two violet lines of the hydrogen spectrum.
5. Use your calibration curve to determine λ of the blue-green and violet lines in the atomic hydrogen spectrum. Compare results to accepted values.

OPTIONAL: The calibration curve is very non-linear. Since a more linear plot facilitates interpolation of an unknown λ, try plotting deviation *vs* $1/\lambda^2$.

TABLE OF WAVELENGTHS:

Mercury lines			Hydrogen lines		
	λ (in nm)	$(1/\lambda^2)$		λ (in nm)	$(1/\lambda^2)$
		$\times 10^6 (\text{nm})^{-2}$			$\times 10^6 (\text{nm})^{-2}$
Yellow$_1$	579.0⎤ (unresolved)				
Yellow$_2$	577.0⎦ Avg. = 578	2.993	Red	656.3	2.322
Green	546.1	3.353	Blue-green	486.1	4.232
Blue	496.0*	4.065			
	49l.6*	4.138	Violet	434.0	5.309
Blue	435.8	5.265			
-violet	434.7*		Deep Violet	410.2	5.943
Deep-	433.9*				
violet	407.8*	6.013	NOTE: * implies		
	404.7*	6.106	usually faint		

PART V: DIFFRACTION GRATING

CAUTION: Do not touch grating surface under any circumstance!

1. *Grating constant (number of lines per cm)*: The lines/cm marked on these replica gratings is only approximate because the plastic often changes dimensions when it is stripped from the master grating. To achieve quantitative results calibration of the grating constant is desirable and can be performed using the known λ, 546.1 nm, of the Hg green line.

   CALIBRATION PROCEDURE:

   a) Align telescope with collimator so the slit image falls exactly on the vertical cross hair.
   b) Mount grating on the dowel pins in the prism table. Adjust and clamp the table so the grating is approximately $\perp$ to telescope-collimator axis.
   c) Then adjust the table so that the front grating face is accurately $\perp$ to telescope. Use the Gaussian eyepiece (see Part II - B) for the final adjustment: the reflected image of the cross hairs should fall on the cross hairs. (Two reflected images can result if the sides of the grating glass are not parallel. If so, test which image comes from the grating side by wetting the other side.) Clamp prism table in this position and record telescope direction.
   d) Next set telescope on the first and second orders of the Hg green line. Use both $\pm$ angles. The $\pm$ angles should of course agree. Use them and $\lambda_{\text{green}} =$ 546.1 nm to calculate the grating spacing d from

$$n\lambda = d \sin\theta.$$

2. *Measurement of the wavelengths in the Balmer series in hydrogen*:

   a) Use the calibrated grating spectroscope to measure λ for three or four atomic hydrogen spectral lines.
   b) Compare these λ's to those from the Balmer formula

$$\frac{1}{\lambda} = R\left[\frac{1}{2^2} - \frac{1}{n^2}\right] \quad \text{where } R = 10,967,758 \text{ m}^{-1}$$

   or calculate the frequencies of these lines and compare to

$$f = cR\left[\frac{1}{2^2} - \frac{1}{n^2}\right] \text{ where } R = 10,967,758 \text{ m}^{-1}.$$

   c) Use Planck's relation, $\Delta E = hf$, to calculate the energies in eV of the photons for each frequency and, therefore, the energy change in the hydrogen atom associated with each frequency.
   d) Assuming that each observed ΔE leaves hydrogen in the $n = 2$ state, show the observed transitions on a hydrogen energy level diagram (drawn to scale; consult textbook).

PART VI: ADJUSTMENT OF A SPECTROMETER

NOTE: Not to be performed without permission of the instructor

1. Use Gaussian eyepiece and prism face method to focus telescope for parallel rays. If necessary adjust prism table to make reflected image of the cross hairs coincide with the cross hairs.

2. Remove prism from the table and align telescope and collimator approximately. Focus the collimator until there is no parallax between the image of the slit and the cross hairs. Adjust the ring on the collimator focusing sleeve so that the collimator is in focus with the "V" in the slot. Clamp the telescope in line with the collimator so that the image of the slit (vertical) falls on the vertical cross hairs. Now rotate the slit through 90° as permitted by the "V" projection and slot. Adjust the level of the telescope so that the image of the slit falls on the horizontal cross hair. The axes of telescope and collimator are now in line but not necessarily perpendicular to the axis of rotation of the instrument.

3. Replace the prism on the prism table and clamp it relative to the adjusting screws as shown. (Line AB $\perp$ face 1. Line AC $\perp$ face 2. Thus screw B will adjust face 1 without disturbing face 2, and screw C will adjust face 2 without disturbing face 1.

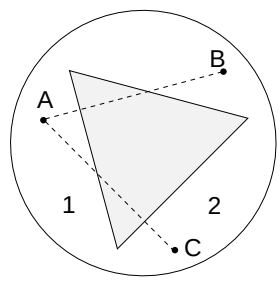

   Bring the telescope to within $< 90°$ of the collimator and use a face of the prism to reflect light from the collimator down the telescope tube. Adjust the prism face so that the center of the slit image falls on the intersection of the cross hairs. The prism face is now parallel to the instrument axis.

4. Set the telescope $\perp$ to the adjusted prism face (use Gaussian eyepiece method). Return to part 3 setup and adjust the collimator so that the center of the slit image falls on the cross hair's intersection. Telescope and collimator are now properly focused and are *perp* to the instrument axis.

5. To adjust the second prism face $\perp$ to the axis of the telescope (again use the Gaussian eyepiece method). Turn only the proper screw on the prism table: otherwise one disturbs the adjustment of the first face. Recheck the first face and, if necessary, readjust it. Continue this process until both faces are parallel to the axis of the instrument. Turn collimator slit to vertical position. The spectrometer should now be in adjustment.

L-6: Polarization

OBJECTIVE: To study polarization and double refraction of light.
APPARATUS:

Polarization kit plus a polariscope; Brewster angle assembly (laser + mount on M-2 force table, slotted pin & black piece of plastic).

SUGGESTED EXPERIMENTS:

1. *Polarization by ABSORPTION*: Observe a light source (desk lamp) thru each of two polaroids, and then thru both together. Rotate one of the two about the line of sight. Explain what occurs.

   Orient the two polaroids of the *polariscope* so no light is transmitted. Then introduce a third polaroid between the first two and rotate it about the line of sight. Explain what happens.
   HINT: there will be an amplitude component $E\cos\theta$ in the direction of the transmission axis.

2. *Polarization by REFLECTION from a dielectric*: Observe thru the small polaroid (the one with the rim index marks) the light reflected from the black plastic (see figure at right). Rotate the polaroid about the line of sight. Note position of the index marks (i.e. the E vector direction) on polaroid when the transmitted reflected light is a minimum.

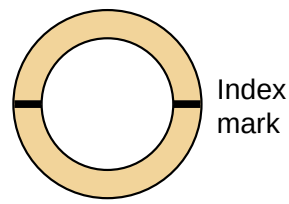

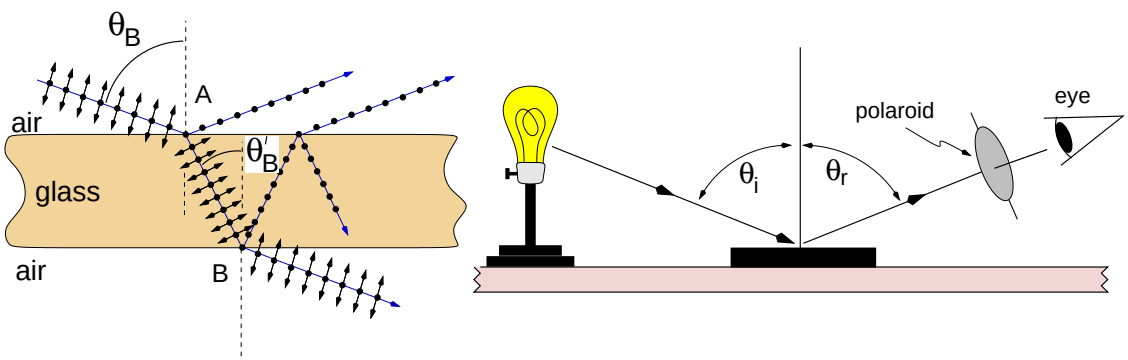

Figure 1: Reflection and transmision of light at Brewster's angle.

Now find an incident angle θ_i (and reflection angle θ_r) for which this minimum is zero. Then θ_i is *Brewster's angle*, θ_B, and $\tan\theta_B = n_2/n_1$. Estimate θ_B roughly. What is the refractive index n_2 of the plastic?

Alternatively for greater accuracy use a laser plus polaroid to prepare a beam polarized in the plane containing the incident ray and the normal to the reflecting surface. *The reflected beam then vanishes at Brewster's angle.* Mount laser plus polaroid on the M-2 force table and point it toward a dielectric (plastic or microscope slide) in the slot of the central pin. Rotate the sample until the reflected beam (on the wall) disappears. A thread from the center pin to this point on the wall will help locate the angles on the M-2 table.

Observe any polarization of light reflected from painted or varnished surfaces, floor tile, *clean metal* (e.g. aluminum foil) etc.

3. *Polarization by SCATTERING*: Try to detect the polarization of skylight: **one needs a blue sky**! Explain (use a diagram) in what direction relative to sunlight should one look to see this polarization best.

4. *Polarization by a DOUBLY REFRACTING CRYSTAL*: Uniaxial doubly refracting crystals (e.g. calcite) are highly anisotropic and, as such, contain an axis of symmetry (the optic axis) for which the velocity of light depends on whether the E-field vector (polarization plane) is $\perp$ to this axis (the ordinary "o" ray) or parallel to the optic axis (the extraordinary "e" ray). In the principal plane (i.e. a plane containing the optic axis but $\perp$ to the surface) the new wave front of the ordinary ray involves the usual spherically expanding wavelets, but to construct the front for the extraordinary ray requires ellipsoidally expanding wavelets where the two axes of the ellipse are proportional to the velocities of the parallel and $\perp$ vibrations to the optic axis.

   Calcite ($CaCO_3$) has a large velocity differences between the o and e rays, and its optic axis is the direction at equal angles with the crystal edges at the obtuse corners.

   Observe through the calcite crystal a dot on a piece of paper. Rotate the crystal about the line of sight. Describe the behavior of the two images of the dot. Introduce a polaroid between your eye and the crystal. Note how the appearance of the two images changes as you rotate the polaroid about the line of sight. Explain.

NOTE: For the remaining experiments use the POLARISCOPE. The *polaroid next to the light is the "POLARIZER," the other is the "ANALYZER."* Place the samples to be studied on top of the polarizer.

5. *CIRCULAR POLARIZATION*: A thin doubly refracting crystal cut so that the optic axis is parallel to a surface constitutes a retardation plate. The difference in velocity of the o and e rays then gives a phase difference between the emerging orthogonally polarized rays. If the phase difference is 90°, the retardation is $\lambda/4$: hence a "*quarter wave plate*".

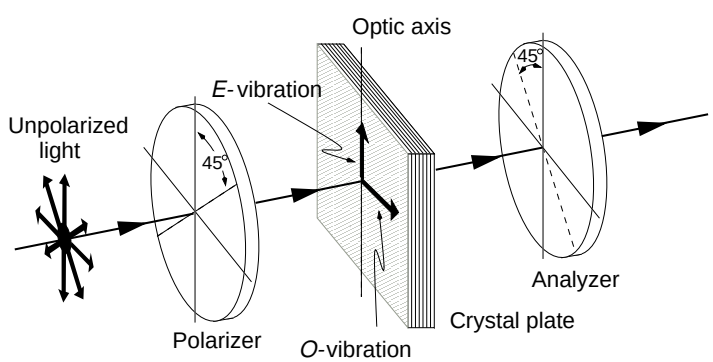

Figure 2: Obtaining circularly polarized light from unpolarized light

Set the analyzer of the polariscope to transmit no light. Then place the $\lambda/4$ plate between the polarizer and analyzer and rotate the $\lambda/4$ plate so that extinction again results. You will find two such extinction positions 90° apart. Why?
HINT: When the optic axis is aligned with the polarization direction of the incoming plane polarized wave, will there be any ordinary ray amplitude? Then when you turn the plate (and thus the optic axis) thru 90°, will there be any extraordinary ray amplitude.

Rotate the $\lambda/4$ plate to a position halfway between the two extinction positions; thus the optic axis will make a 45° angle to the incident plane of polarization. Explain why the plate now looks bright. Leaving the $\lambda/4$ plate in this position, rotate the analyzer through 2π radians. Why does the brightness stay approximately constant*?
HINT: Recall the conditions for a circular Lissajous figure (see E-8 Part B, Fig. 3).

* If it doesn't, repeat the preceding operations. You may not have set the $\lambda/4$ plate close enough to the halfway or 45° position. Also remember that a $\lambda/4$ plate is exactly $\lambda/4$ only for a single λ.

6. TWO $\lambda/4$ PLATES: Place a $\lambda/4$ plate on the polarizer so as to produce circularly polarized light. Place a second $\lambda/4$ plate on top of the first and similarly oriented. Observe and explain what happens when you now rotate the analyzer. Turn the top $\lambda/4$ through 90° about the line of sight. Observe and explain what happens now when you rotate the analzyer.

7. COLOR EFFECTS: If the plate is thick enough for retardations of several (but not too many) wavelengths, *color effects* may result. For a constant refractive index:

$$\lambda_{\text{red}} \sim 660 \text{ nm} \sim \frac{3}{2}\,(\lambda_{\text{blue}} \sim 440 \text{ nm}).$$

Thus a $\lambda/2$ plate for red is a $3\lambda/4$ plate for blue. [In general, a n($\lambda/2$) plate for red $\sim 3n(\lambda/4)$ plate for blue where n is an odd integer.] Hence for white light such a plate at 45° between parallel polaroids would completely extinguish the red but pass the circularly polarized blue light. The resultant color is complementary to that removed. The intensity (hue and saturation) will of course vary with the relative orientation of polarizer, the retardation plate, and the analyzer. As n becomes large the range of λ extinguished narrows. Hence that passed is more nearly white.

   a) Place thin mica on the polarizer (with analyzer crossed). Try various mica orientations. Explain.
   b) Repeat a) for the mounted specimen of cellophane tape.

8. PHOTO-ELASTIC EFFECTS: Strained isotropic materials become doubly-refracting.

   With the polariscope set for extinction:

   a) Insert and flex the U-shaped lexan (a polycarbonate resin) sample.
   b) Insert a microscope slide vertically. View the long edge and stress the slide by *gently* flexing it. Note result. (Glass blowers use polarized light to test for residual glass strains).

9. *LCD APPLICATIONS*: Watches and calculators often use LIQUID CRYSTAL DISPLAYS (LCD) in which *nematic* liquids (thread like molecules arranged nearly parallel to each other) can become optically active, rotate the plane of polarization and thus permit light to pass thru crossed polaroids. A reflector after the analyzer returns the light through the cell.

   To produce the optical rotation: two glass plates, which have been rubbed in one direction to produce invisible scratches, attach aligned *nematic* molecules. If a few

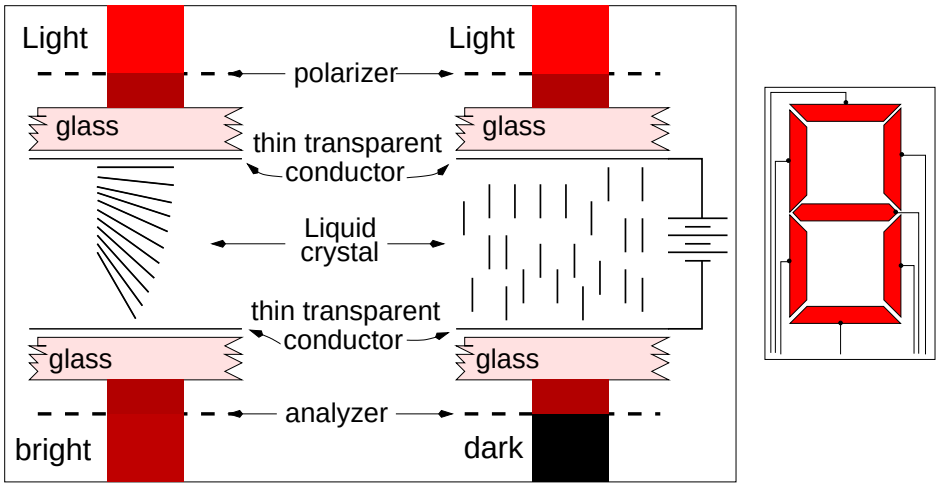

Figure 3: Construction of a liquid crystal display

micron thick *nematic* liquid separates the plates, and if one plate is rotated relative to the other, then the helical arrangement of the *nematic* liquid produces a rotation of the plane of polarization.

To extinquish the light one applies a voltage between the transparent (but conducting) tin-oxide coated glass surfaces. A sufficient voltage gradient will align the dipole moments of the molecules and thus destroy the optical rotatory power. Voltages applied to segments of the seven segment pattern (see figure) permit display of any numeral 0 to

The power consumption of such an LCD is almost negligible.

OPTIONAL QUESTIONS:

1. How experimentally can one tell whether a light beam is unpolarized? Plane polarized? Circularly polarized?

2. How could you tell whether an object is a gray plastic, a polarizing sheet, a $\lambda/4$ plate or a $\lambda/2$ plate?

3. How could you change right circularly polarized light to left circularly polarized light?

4. Why does the flexed lexan show colors but not the microscope slide?

%newpage

Part IV
Modern Physics

MPC-1 Radiation and its Interaction with Matter

MPC-1a Random Events - Counting Statistics

OBJECTIVES:

To study and measure the occurrence of random events. This in preparation for study of the absorption of radiation by matter.

INTRODUCTION:

There are many type of events that are controlled by pure random chance: the number of babies born on a particular day of the week, the number of fender benders in Madison a year (assuming that the number of cars in Madison does not change), the number of people (out of one thousand) that feel better after taking a particular kind of pain reliever or the number of murders in a year in New York City.

In all these examples one discovers that, if one repeats the observation, the new number will differ from the preceding one. More importantly the number found can not be predicted using the knowledge of a preceding observation nor can it be used to predict the following one. For example the number of babies born on a particular Monday will usually be different from the number born on the succeeding Monday. Similarly, the number of patients (out of a different one thousand) that feel better after taking a particular kind of pain reliever, or the number of murders in the following year in New York City will be unpredictably different.

EXAMPLE I: AN IMAGINARY EXPERIMENT

The average number of births per day is $\overline{N} = 16$. Don't worry about the numbers in the last two columns, we will discuss them in the next section. However the mysterious value of σ calculated above tells one how far from the average $\overline{N}$ one can expect a single observation to lie.

Table I: Number of babies born on Monday in Hospital 'X'

Week	Date	Births N	$\Delta N_i = N_1 - \overline{N}$	ΔN_i^2
1	Mon Jan 4	15	-1	1
2	Mon Jan 11	15	-1	1
3	Mon Jan 18	13	-3	9
4	Mon Jan 25	19	3	9
5	Mon Feb 1	16	0	0
6	Mon Feb 8	18	2	4
7	Mon Feb 15	16	0	0
8	Mon Feb 22	14	-2	4
9	Mon Mar 1	24	8	64
10	Mon Mar 8	10	-6	36
	Sum:	$\Sigma N_i = 160$		$\sum \Delta N_i^2 = 128$
	Average:	$\overline{N} = 160/10 = 16$		$\sum \Delta N_i^2/10 = 12.8$
	Width of Distribution: $\sigma = \sqrt{12.8} = 3.58$			

Making a 'histogram' of the above data gives⇒

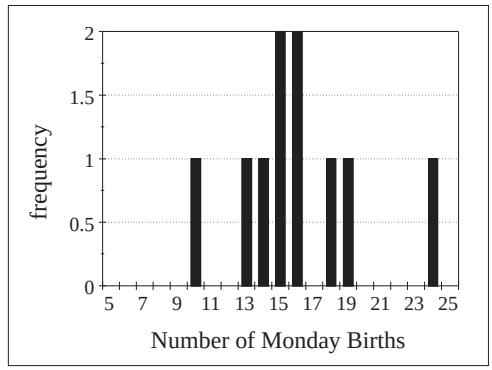

Fig. 1: Distribution of Monday births

What does the figure tell you?

1. It shows the 'distribution' of the number of births, i.e. it shows the 'frequency' of a certain number of births: there were two days with fifteen births, and two days with sixteen births, there were no days with less than ten or more than twenty-four births.
2. It shows that days with a number of births close to the average occur more frequently than days in which the number of births is very different from the average.

EXAMPLE II

You are in the street when a short shower produces just a few drops. You see the marks of the drops on the pavement, the pavement is divided in regular 2 m^2 squares. Having nothing to do, you count the drop marks in fifteen of those squares. Your observations are listed below.

You conclude that the average number of drops on each pavement square is $\overline{N} = 39.2$, but you would not be surprised to find some squares with 30 or 50 drop marks.

Table II

Counts	$\Delta N_i = N_i - \overline{N}$	$\Delta N_i{}^2$
$N_1 = 27$	-12.2	148.84
$N_2 = 44$	4.8	23.04
$N_3 = 41$	1.8	3.24
$N_4 = 40$	0.8	0.64
$N_5 = 50$	10.8	116.64
$N_6 = 38$	-1.2	1.44
$N_7 = 39$	-0.2	0.04
$N_8 = 37$	-2.2	4.84
$N_9 = 29$	-10.2	104.04
$N_{10} = 42$	2.8	7.84
$N_{11} = 46$	6.8	46.24
$N_{12} = 39$	-0.2	0.04
$N_{13} = 36$	-3.2	10.24
$N_{14} = 42$	2.8	7.84
$N_{15} = 38$	-1.2	1.44
	$\Sigma N_i = 588$	$\Sigma \Delta N_i{}^2 = 476.4$
	$\overline{N} = 588/15 = 39.2$	$\sigma = \sqrt{476.4/15} = 5.6$

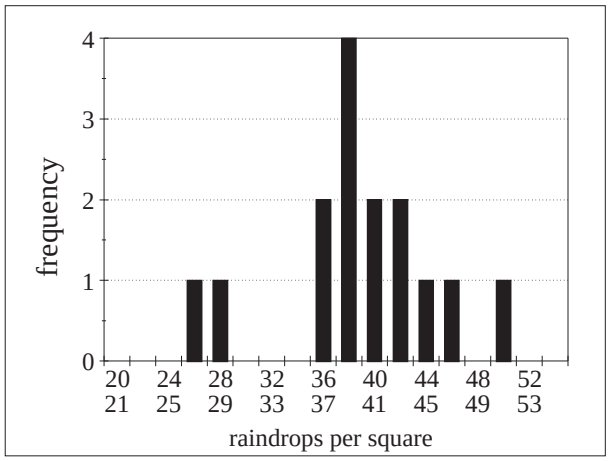

Fig. 2: The rain drop data

Again the value of σ calculated above tells how far from the average $\overline{N}$ one can expect a single observation to be.

You may argue that the value of σ in the two examples was obtained using many observations; how can one know its value if one does only one observation?

In other words, if I make only one observation, for instance if I find that the number of drops in a single square is $N = 35$, what can I say about how far from the unknown but true value $\overline{N}$ it is likely to be?

REQUIRED KNOWLEDGE:

Statistical theory predicts that if one records the counts of m different experiments: $N_1,\ N_2,\ N_3,\ N_4,\ .....\ N_m$ and one calculates the average of these $\overline{N} = (\Sigma_1^m N_i)/m$ the counts will distribute themselves around the average value. Counts close to the average will occur frequently, counts very different from the average will occur infrequently.

If one makes a histogram of the number of times a certain count appears one finds a bell shaped curve called a "Gaussian distribution" centered on the average.
The histogram below looks a lot better than the ones you have seen above; this is so because it shows the distribution of many more observations.

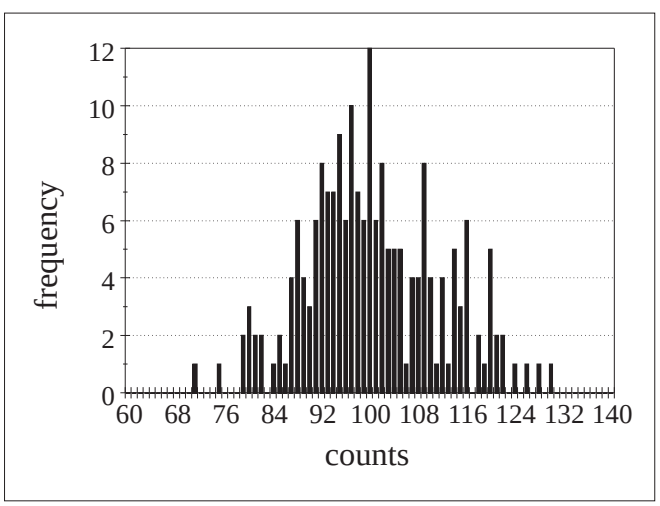

Fig 3: A Gaussian distribution

The histogram shows that counts of about 100 are most frequent, and that counts of 70, or 130 are much less likely to occur; we can think of the "width" of the curve i.e. the range of the counts that occur most frequently is about 20.

THE STANDARD DEVIATION

Statistical theory predicts that the width of the curve, the "standard deviation" of the distribution is defined as:

$$\sigma = \sqrt{\overline{N}}$$

The standard deviation σ is a measure of how wide the curve is; about 1/3 of the counts will lie *outside* the interval $\overline{N} - \sigma$ to $\overline{N} + \sigma$.
Only about 1/20 of the counts will lie *outside* the interval $\overline{N} - 2\sigma$ to $\overline{N} + 2\sigma$. The value of σ is calculated automatically by your computer, so you do not really have to worry about it. However here goes the formula, you may skip this if you wish.

$$\sigma^2 = \left(\sum_{i=1}^{m} (N_i - \overline{N})^2 \right) / m$$

EXPERIMENT

Instead of collecting data from the hospital, from the department of transportation or the NYPD, of the kind shown in the examples above, we will make our own homemade random distribution using the random decay of long lived radioactive nuclei. You will study the statistics of counting. You will find *how* the precision with which one can measure a decay rate R depends on the total number of counts, which in this case is proportional to the time interval during which you observe the radiation.
The rate R of the disintegration of the Radioactive sample is obtained by allowing the G-M counter to detect the radiation emitted for a length of time t, and dividing the number N of observed counts by the time: $R = N/t$.
If you were to repeat the experiment, for the same time interval t, the number of counts would almost certainly *not* be the same because of the random nature of radioactive decay. How accurately would you then know the *real* value of the rate? Intuition tells you that a rate measured with a long time interval t is going to be more reliable than one taken with a short time interval. But even so just how reliable would either of these be? A better way to ask this question is:
If I repeat the experiment, and obtain a different new rate, how big, on the average do I expect the difference between the two rates to be?

EQUIPMENT

- Geiger-Muller counter† and stand. This device detects the (β or γ) radiation from the radioactive sources.

  † The Geiger Muller tube was first developed by Hans Geiger(1882-1945) who collaborated with Sir Rutherford at Manchester in the early work on radioactivity which later led to the discovery of the atomic nucleus by Rutherford. The counter was then perfected by Muller in 1928 and is now known as the

Geiger-Muller (GM) counter. The counter consists of a fine wire along the axis of a gas filled metal tube. The wire is made about 500 V positive with respect to the tube. When ionizing radiation, such as γ rays or β particles, enters the counter it breaks up (ionizes) a few gas atoms releasing electrons which are rapidly accelerated toward the positive wire. These electrons collide with other gas molecules, releasing new electrons. Finally, an avalanche of many millions of electrons reaches the wire and produces a voltage pulse large enough to be detected and counted. The whole process can be initiated by a single α, β or γ ray entering the counter.

The Geiger counter is mounted vertically in a stand.

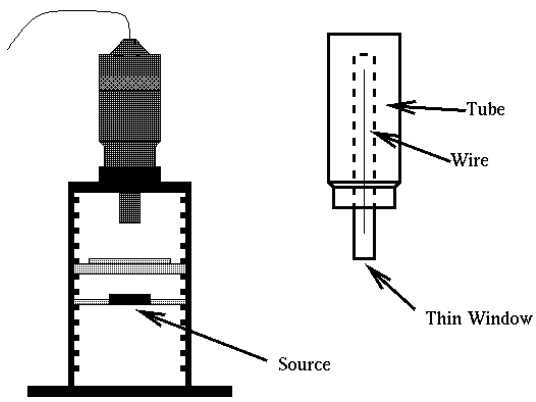

Figure 4: The Geiger-Muller counter and stand

- Pasco Interface, receives the impulses from the GM counter and transfers data to the PC.
- A radioactive γ source.
- A platform that can be inserted into slots in the GM counter stand. This varies the source to counter distance.

PRECAUTIONS: The Geiger counter has a very thin window to permit the entry of β radiation. The window is protected by a plastic cap. In this laboratory exercise you will use γ emitting Cobalt sources, the cap should be left *on*.

PROCEDURE I:

In order to obtain statistics fairly rapidly for different time intervals you will be divided into three groups of students, each group will use different time intervals. You will then compare results at the end.

(a) Click on the Launch NC-1A icon below (web version) to initiate the PASCO DataStudio software window. The screen should show three data windows: a table window, a graph window and a histogram window.

(b) A total of 336 seconds have been allocated for collecting the data. If you wish to verify or change this: 1) CLICK on the Setup icon 2) In the Experimental Setup window CLICK on the Options Icon 3) In the Sampling Options window CLICK on the Automatic Stop tab.

(c) By default the time period between data collection points is set to 12 seconds. To change this: 1) CLICK on the Setup icon 2) In the Experimental Setup window DCLICK on the Geiger Counter icon 3) modify the "Seconds between

Samples" setting.
⇒Group #1 should set the count time period to 3 seconds, and will therefore observe the count in 112 3 second intervals.
⇒Group #2 should set the count time period to 12 seconds and will therefore observe the count in 28 12 second intervals.
⇒Group #3 should set the count time period to 48 seconds and will therefore observe the count in 7 48 second intervals.
All groups will compare results at the end.

(d) Stack **two** Cobalt sources on top of each other in slot #2 (the second slit counting from the top).
Prepare a table as shown below; you will enter your results, and those of other groups in this table.

(e) CLICK on the START icon and then wait until the computer has finished taking data. Enter the mean ($\overline{N}$), and the standard deviation in Table III.

(f) To modify the histogram properties (e.g., bin size) DCLICK in the histogram window.

TABLE III

$\overline{N}$	σ	$\sqrt{\overline{N}}$	$100 \times \frac{\sigma}{\overline{N}}$	$100 \times \frac{\sigma - \sqrt{\overline{N}}}{\sqrt{\overline{N}}}$
mean	std. dev.		rel. unc.	

ANALYSIS OF THE DATA

1. Enter the data obtained by the other groups in Table III
2. Calculate the value of $\sqrt{\overline{N}}$ and enter it in column 3 of the table.
3. Calculate the value of $100 \times \frac{\sigma}{\overline{N}}$ and enter it in column 4 of the table.
4. Plot a graph of the relative uncertainty in the determination of the disintegration rate $100 \times \sigma/\overline{N}$ versus $\overline{N}$.
5. If you have time calculate the value of $100 \times \frac{\sigma - \sqrt{\overline{N}}}{\sqrt{\overline{N}}}$ and enter it in column 5 of the table.
6. Plot a graph of the percent error $100 \times \frac{\sigma - \sqrt{\overline{N}}}{\sqrt{\overline{N}}}$ versus $\sqrt{\overline{N}}$.

QUESTIONS

Q1 Does the precision in the measurement of the decay rate depend on on the number of counts? How?

Q2 A pharmaceutical firm tests a new medication by comparing a group of patients who were given the medicine with a group that received a placebo. The results are the following:
of 1000 patients who were given the medicine 750 were cured.
of 1000 patients who were given the placebo 600 were cured.
Is the new medicine effective? Why?
How would your opinion change, if the numbers were 100, 75 and 60?

MPC-1b: Absorption of Radiation

INTRODUCTION:

Many atomic nuclei are radioactive. This means that they spontaneously decay, a nucleus of a given atomic number Z (the number of protons in the nucleus, and the number of electrons buzzing around it) and mass number A (the number of protons plus the number of neutrons) transmutes into a nucleus with a different atomic number Z' or a different mass number A' or both. In this process they emit α particles (helium nuclei), β particles (fast moving electrons), or γ rays (energetic, penetrating photons). The instant in time at which an individual nucleus will decay cannot be predicted, this is a random event, but if one observes a large collection of N identical radioactive nuclei, the number ΔN that decays in a short time interval Δt is given by

$$\Delta N \approx -N\frac{\Delta t}{\tau}, \tag{1}$$

where τ is the "mean life" of the radioactive nucleus; it is the time necessary for 63% of the original number of nuclei to decay.

If one starts with N_0 nuclei at time $t = 0$ then the number of nuclei left after a time t is:

$$N = N_0 e^{-t/\tau}$$

The rate R at which nuclei decay is therefore: $R = -\Delta N/\Delta t \approx \frac{N}{\tau} = (N_0/\tau)e^{-t/\tau}$

If the mean life τ is very long compared with the duration of an experiment the rate R at which the nuclei decay is practically constant:

$$\Delta N/\Delta t \approx N_0/\tau \tag{2}$$

Often the life of a radioactive nucleus is expressed in terms of a "half life" $\tau_{1/2}$ which is the time necessary for 50% of the nuclei to decay; $\tau_{1/2} = 0.69\tau$. The above expression is an approximation valid when the time interval Δt is much shorter than τ, as is true in this experiment.

NOTE TO THE INSTRUCTOR: You should remove the plastic cap from the GM counter for the students studying the absorption of β radiation. Please be sure to replace the cap when the lab is finished; or else it will get lost!

EXPERIMENT

You will detect and study the absorption in different materials of the decay products of two nuclei, Co^{60} whose half life is 5.3 years and which emits γ rays of energy about 1.3 MeV, and $T\ell^{204}$ whose half life is 3.8 years and which emits β particles of maximum energy about 0.75 MeV. The β particles have a continuous energy spectrum from zero to the maximum. You will find that γ rays and β particle are partially absorbed as they traverse a thickness of material, and that the absorption depends mostly in the number of electrons per square centimeter in the absorber.

In order to do all this fairly rapidly different groups of students will do different parts and compare their results at the end.

IMPORTANT:

When a beam of N_0 particles crosses a layer of absorber of thickness $t\ mg/cm^2$ the number of particles that emerge is given by:

$$N = N_0 e^{-t/\lambda}$$

This formula is similar to the one at the beginning of this writeup:
the number of particles absorbed in a small thickness Δt is

$$\Delta N \approx -N \frac{\Delta t}{\lambda}$$

Here λ is the "absorption thickness" of the material, and is it is the thickness necessary for 63% of the original number of nuclei to absorbed.

The data has an exponential form; if one takes the logarithm of the number of particles one obtains a linear expression, which is easier to analyze:

$$\ln N = \ln N_0 - \frac{t}{\lambda}$$

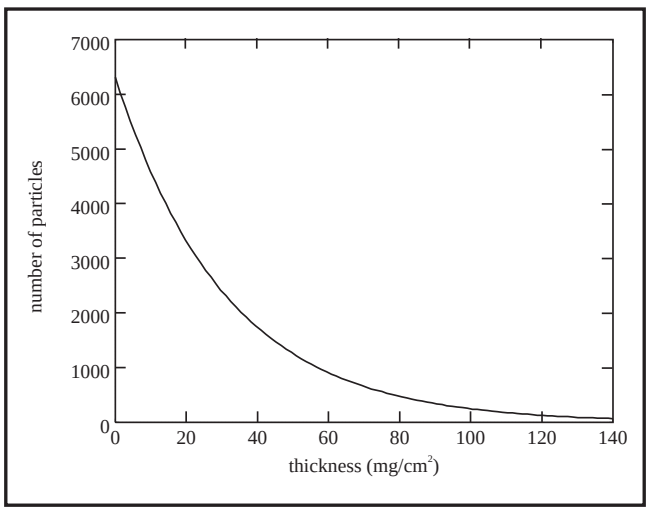

Figure 1: Number of particles vs thickness.

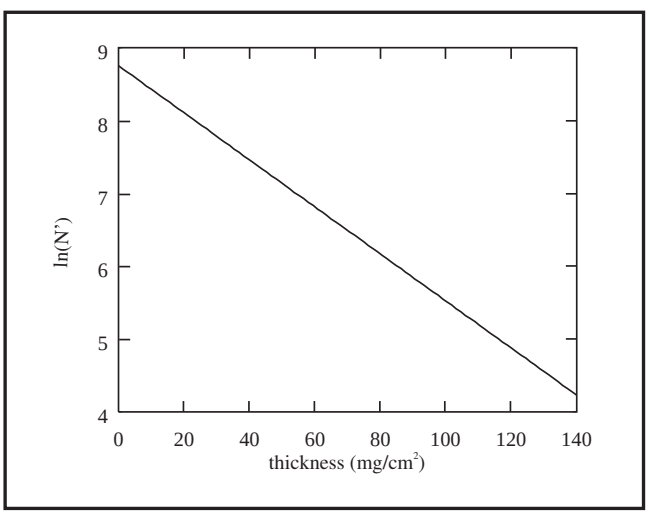

Figure 2: $\ln N$ vs. thickness on log-linear paper. The slope of the line is equal to $-1/\lambda$

EQUIPMENT

1. Geiger-Muller counter† mounted vertically and stand. This device can detect either β- or γ-radiation from the radioactive sources.
   † The Geiger Muller tube was first developed by Hans Geiger(1882-1945) who collaborated with Sir Rutherford at Manchester in the early work on radioactivity which later led to the discovery of the atomic nucleus by Rutherford. The counter was then perfected by Muller in 1928 and is now known as the Geiger-Muller (GM) counter. The counter consists of a fine wire along the axis of a gas filled metal tube. The wire is made about 500 V positive with respect to the tube. When ionizing radiation, such as γ rays or β particles, enters the counter it breaks up (ionizes) a few gas atoms releasing electrons which are rapidly accelerated toward the positive wire. These electrons collide with other gas molecules, releasing new electrons. Finally, an avalanche of many millions of electrons reaches the wire and produces a voltage pulse large enough to be detected and counted. The whole process can be initiated by a single α, β or γ ray entering the counter.

   The Geiger counter is mounted vertically in a stand.
2. PASCO Interface, receives the impulses from the GM counter and transfers data to PC
3. Two radioactive (β and γ sources).
4. Lead, Aluminum and Poly absorbers.
5. A platform with multiple slots. This permits the radioactive source to be placed at various distances from the counter.

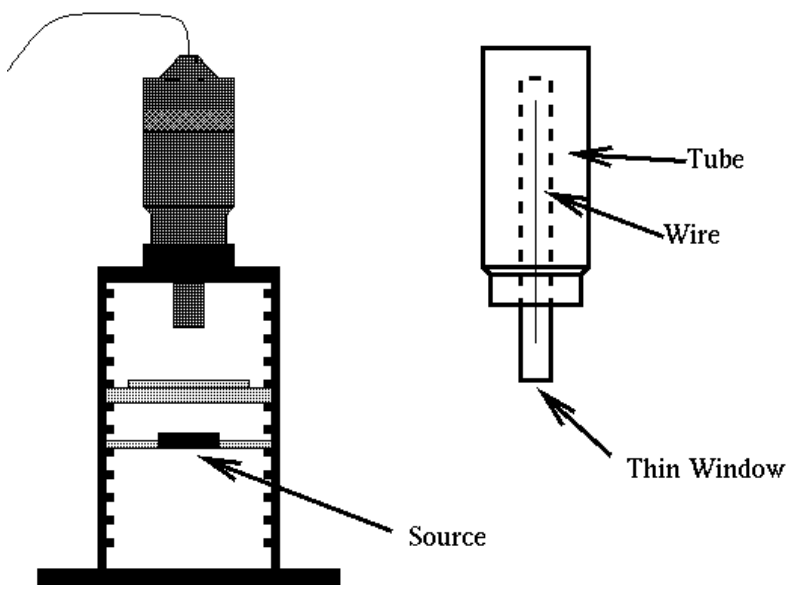

Figure 3: The Geiger-Muller counter and stand

PRECAUTIONS: The Geiger counter has a very thin window to permit the entry of the radiation under study; the window is protected by a plastic cap. Groups working on β radiation should ask their TA to remove it carefully. Do not poke anything up toward the counter. The window is very fragile, if it is broken the counter will not function, and can not be repaired.

PROCEDURE I: (45 min)

In this procedure you will do the work in separate groups and then discuss your results with the different groups. You will observe the absorption of β and γ radiation in Lead, Aluminum and Polyethylene: γ and β radiations behave very differently in traversing absorbers; because of this your instructions will depend on the source you are studying.

- γ rays are energetic photons, when a γ ray interacts with an atom, the γ undergoes 'Compton Scattering' and is effectively eliminated from the beam.
- β rays are energetic electrons, when an electron traverses matter, it knocks low energy electrons out of the atom, in this way loses energy and eventually stops.

Because of this the work will be divided among different groups:

Group # 1 $\Rightarrow$ Poly β : Group # 2 $\Rightarrow$ Pb γ : Group # 3 $\Rightarrow$ Al γ

NOTE: *All Groups must make a Background measurement*

Click on the Launch NC-1B icon below (web version) to initiate the PASCO software window. The screen should show two windows: a table window and a graph window.

1. Remove the sources from the vicinity of the GM counter, set them at least 1 m away.
2. A total of 300 seconds have been allocated for collecting the data. If you wish to verify or change this: 1) CLICK on the Setup icon 2) In the Experimental Setup window CLICK on the Options Icon 3) In the Sampling Options window CLICK on the Automatic Stop tab. For group #1 you may reduce it to 101 second. For groups #2 and #3 the value should remain at 301 seconds.
3. By default the time period between data collection points is set to 10 seconds. To verify this: 1) CLICK on the Setup icon 2) In the Experimental Setup window DCLICK on the Geiger Counter icon 3) examine the "Seconds between Samples" setting. A 10 s interval is not really unnecessary but in this way you can see the data begin record without waiting a full five minutes.
4. The statistics should appear in the Table window as well. Multiply the 'mean' by the number of time periods (10 or 30 for group #1, 30 for groups #2 and #3) to obtain the total number of counts. This is how you will measure the total number of counts for all data runs. Record your result in Table I.

   These counts are mostly due to a radiation called Cosmic Rays: energetic protons and other nuclei produced somewhere in the galaxy (probably supernovæ or pulsars) that impinge on the upper reaches of the earth's atmosphere. These particles interact in the atmosphere and produce secondary particles that reach sea level, cross the roof of the laboratory and finally cross your GM tube. They are mostly electrons, positrons and muons. Their number is small $\sim 10^{-2}/cm^2 \cdot s$ but not negligible. This background rate must be subtracted from all subsequent counting rate determinations for the γ or β sources.

Table I

Absorber name	t	Total Counts	$\sqrt{N}$	$N' =$	$\ln N'$
	mg/cm^2	N		$= N - N_{bgr}$	
Background	$0\ mg/cm^2$				

γ Pb Group

5. $\Rightarrow$ Place two Co sources on top of each other in slot # 5 (counting from the top), CLICK on the Start icon and wait until the computer stops recording and enter the result in Table I with absorber thickness $t = 0\ mg/cm^2$.
6. Place various lead absorbers in the slots between the source and the counter. Record the data in table I. Repeat with different absorbers. (Use one 'T' absorber, then two 'T' absorbers and then three'T' absorbers together, for maximum absorption.) Record your data.
   NOTE: The standard deviation shown by the computer is *not* the error in the rate measurement because it refers to the number of time intervals during which the data was taken. The error in the rate measurement depends on the total number of counts, it is $\sigma = \sqrt{N}$.

γ Al Group

7. $\Rightarrow$ Same as step 5, but put the double source in slot # 6, CLICK on the Start icon and wait until the computer stops recording. Then enter the result in table I with absorber thickness $t = 0\ mg/cm^2$.
8. Place one Aluminum 'P' absorber in the slots between the source and the counter. Then put two, three and four 'P' absorbers in the slots. Record the data in table I.

   ADDITIONAL PRECAUTIONS FOR THE BETA PARTICLES EXPERIMENT:
   The absorbers for this part are extremely thin. *Please treat them carefully* !!!

β Poly Group

9. $\Rightarrow$ Check that the plastic cap has been removed from the GM counter. Place the source in slot #4 with the side without writing facing toward the GM counter. CLICK on the Start icon and wait until the computer stops recording and enter the result in table I with absorber thickness $t = 0\ mg/cm^2$.
10. Place various Poly absorbers in the slots between the source and the counter. Use a 'C', a 'D', two 'D's, an 'E' and a 'C' together, an 'F', and an 'F' and a 'D' together. Record the data in table I. Repeat with different absorbers. Record your data in Table I.

ANALYSIS OF THE DATA

Plot the the natural logarithm of the counts N versus the absorber thickness t. Draw a straight line through the experimental points, and find the corresponding absorption length λ by measuring the slope of the line.

QUESTIONS

Q1: Does the absorption of γ rays depend on the Z of the absorber?

Q2: Why are β rays so easily absorbed?

Appendices

A. Precision Measurement Devices

Vernier Calipers:

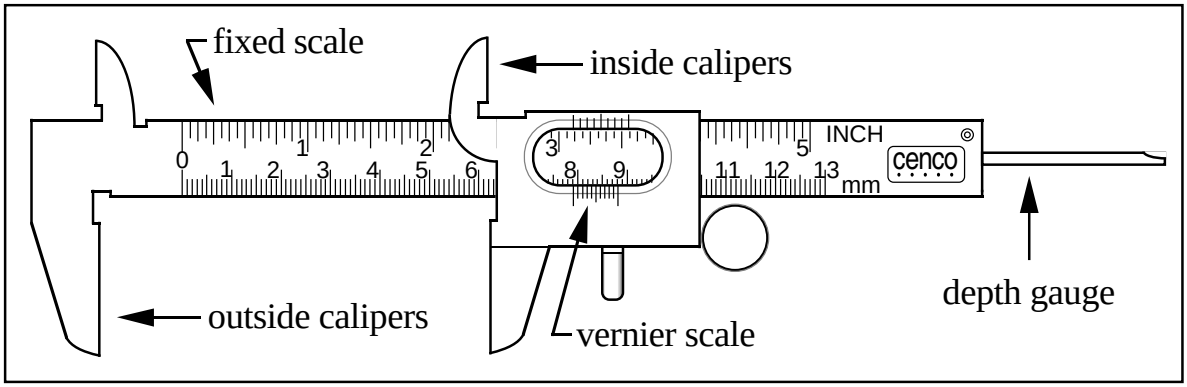

Figure 1: The vernier caliper

A Vernier consists of a fixed scale and a moving *vernier* scale. In a metric vernier the fixed scale is marked in centimeters and millimeters, the vernier scale is nine millimeters long, and is divided into ten parts each 0.9 millimeters long. The distances of each line from the first are therefore 0.9, 1.8, 2.7, . . . ,mm or generally: $d_i = 0.9 \times i$, where d_i is the distance between the zero line and the ith line of the vernier scale. If the vernier caliper is closed, so that the two jaws touch each other, the zero of the fixed scale should coincide with the zero of the vernier scale. Opening the jaws 0.03 $cm = 0.3$ mm will cause the fourth line (the *three* line which is a distance of 2.7 mm from the zero line of the of the vernier scale) to coincide with the 3 mm line of the fixed scale as shown below.

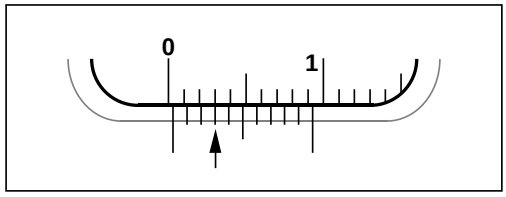

Figure 2: The vernier reads 0.03 cm

Below is another example of vernier reading; the arrow shows which mark on the vernier scale is being used.

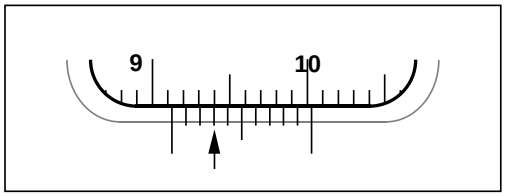

Figure 3: The vernier reads 9.13 cm

EXERCISES:

A. Close the vernier and observe that the first vernier mark coincides with the zero of the centimeter scale.

B. Open the jaws of the vernier very slowly and observe how the different vernier marks coincide successively with the millimeter marks on the fixed scale: the first mark coincides with the 1 mm mark on the fixed scale; then the second mark coincides with the 2 mm mark on the fixed scale; then the third mark coincides with the 3 mm mark on the fixed scale and so on.

C. Estimate the dimension of an object using a meter stick and then Use the vernier caliper to measure the dimension precisely.

D. In the four examples of Fig. 4 determine the actual reading.

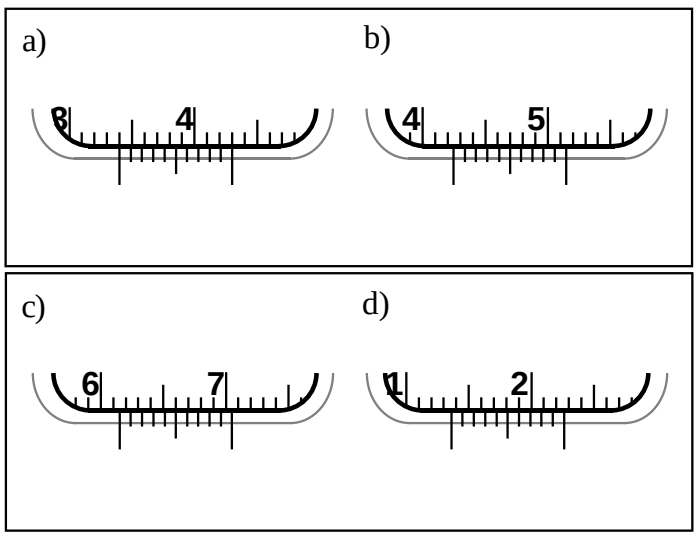

Figure 4: Test cases

Micrometer:

A micrometer can measure distances with more precision than a vernier caliper. The micrometer has a 0.5 mm pitch screw, this means that you read millimeters and half millimeters along the barrel. The sleeve is divided into 50 divisions corresponding to one hundredth of a millimeter (0.01 mm) or 10 μ each. The vernier scale on the micrometer barrel has ten divisions, marked from 2 to 10 in steps of two. The "zero" line is not marked '0', but is longer than the others. The vernier allows you to read to the nearest thousandth of a millimeter, *i.e.*, to the nearest micron (0.001 $mm = 1\ \mu$).

Precaution: Great care must be taken in using the micrometer caliper; A ratchet knob is provided for closing the caliper on the object being measured without exerting too much force. Treat the micrometer with care, **ALWAYS** close the calipers using the ratchet knob, this prevents tightening the screw too strongly. Closing the calipers too hard damages the precision screw.

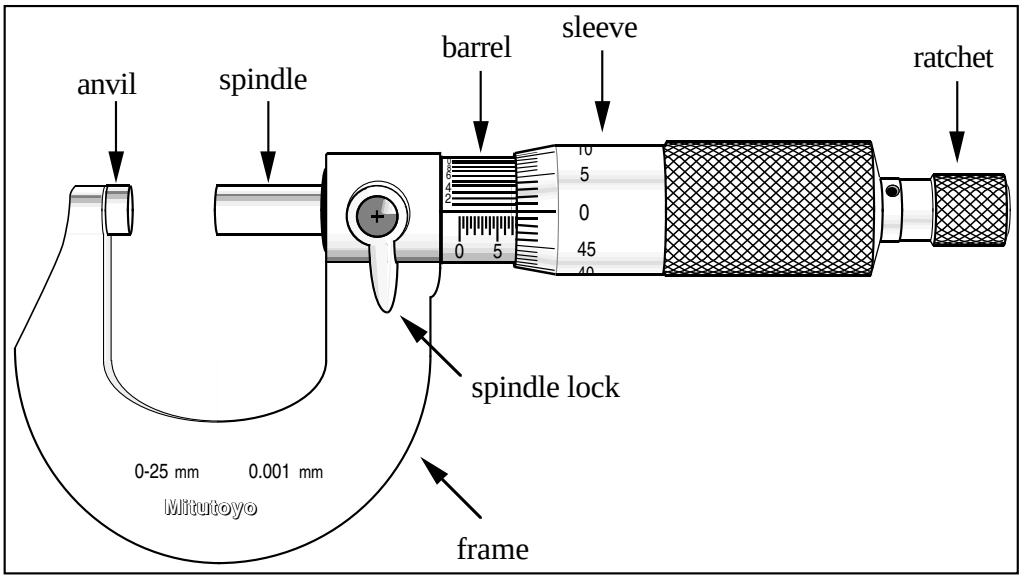

Figure 5: The micrometer calipers

Below are two examples of micrometer reading; the arrow shows which mark on the vernier scale is being used.

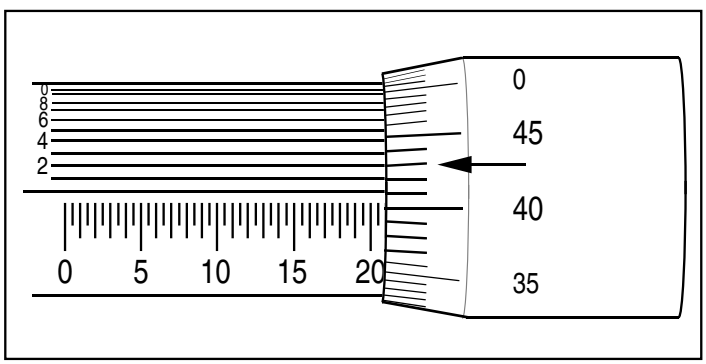

Figure 6: The micrometer reads 20.912 mm

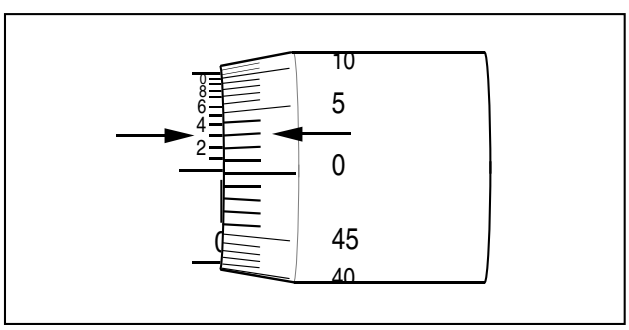

Figure 7: The micrometer reads 3 μ

In Fig. 7 the zero line on the barrel is barely visible, and the vernier reads 0.003 mm = 3 μ; the zero error is $\epsilon_0 = 3\mu$.

A negative zero error, as shown below requires a moment of thought.

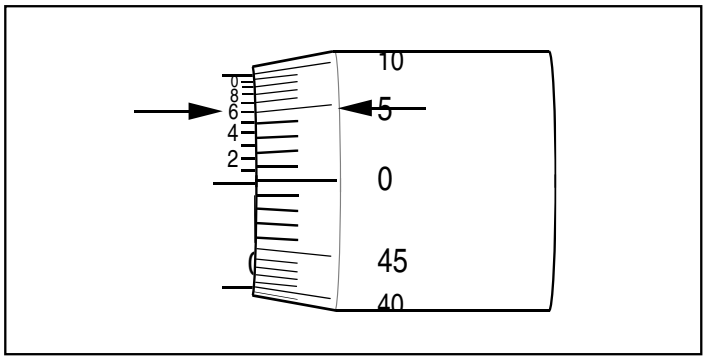

Figure 8: The micrometer reads -4 μ

In Fig. 8 the zero line on the barrel of the micrometer is obscured by the sleeve, (the "zero" line on the sleeve is above the "zero" line on the barrel) this corresponds to a reading of -0.5 mm; the vernier reads 0.496 mm the zero error is then $\epsilon_0 = -0.5 + 0.496 = -0.004mm \ = -4 \ \mu$.

B. The Travelling Microscope

The sliding carriage of the traveling microscope rides on carefully machined ways, pushed by a nut under the carriage which rides on the micrometer screw. The nut must not fit tightly on the screw or it will bind; hence there is always some slack built into the mechanism.

When the nut is being pulled to the right (dial being turned toward larger numbers), the screw threads will press against the threads in the nut as shown in Fig. 1, with the screw threads in contact with the back side of the threads on the nut. When the direction of turning reverses, the screw threads then push on the front side of the nut threads.

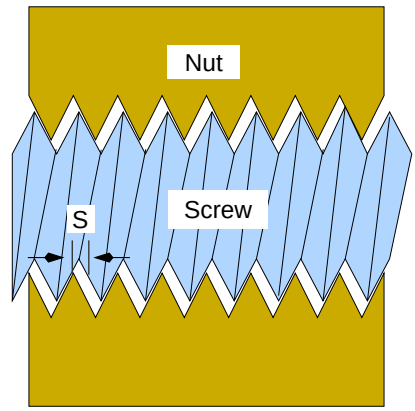

Figure 1: Backlash in screw mechanism.

For the microscope set initially on the same line for both directions of motion, the readings will differ by distance S, the backlash (slop) in the mechanism.

One way to avoid trouble with this slack is always to make settings after turning the screw more than the slack in one direction, say the direction of increasing readings. If one overshoots on a reading, go back by more than the slack and then turn forward again. The screw will then always press on the same side of the nut and no error arises.

A much better experimental technique is to take readings both ways. Suppose one wants to measure the distance between two lines, 1 and 2. Call the reading turned toward larger readings on line 1, D_1 and when turning in the reverse direction, R_1; similarly for D_2 and R_2. Then the distance between the lines will be $D_2 - D_1$ and also $R_2 - R_1$ so that one has immediately two independent readings to compare. More important, $D_1 - R_1$ is the slack in the mechanism; it should equal $D_2 - R_2$ and should be the same for all pairs of readings. If $D - R$ changes by more than the experimental error in setting, you know immediately you have made a blunder in either setting or reading and can immediately repeat the measurement. The constancy of D - R is actually an excellent measure of the uncertainty in the measurements you are taking.

C. The Optical Lever

An optical lever is a convenient device to magnify a small displacement and thus to make possible an accurate measurement of the displacement. Experiment M-11, Young's modulus, uses an optical lever to magnify the extension of a wire produced by a series of different loads.

The plate P carries a mirror M. The mirror mount has two points resting in a fixed groove, F, and at the other end has a single point resting on the object whose displacement one is measuring. Raising the object through a distance ΔL will tilt the mirror through an angle θ or $\Delta L/d$ radians (approximately) but will turn the light beam through an angle 2θ.

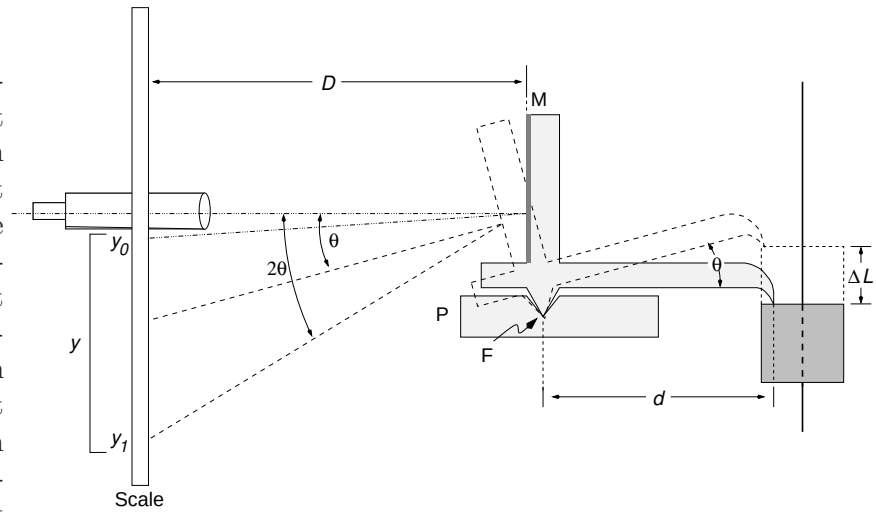

Figure 1: Schematic of the optical lever.

Hence

$$\theta \;=\; \frac{\Delta L}{d} \sim \frac{\frac{1}{2}(y_1 - y_0)}{D}$$

if θ is small so that $\theta \sim \tan\theta$. Therefore

$$2\theta = \frac{2\Delta L}{d} = \frac{y_1 - y_0}{D}, \text{ and } \Delta l = (y_1 - y_0)\left[\frac{d}{2D}\right] \quad .$$

Note that with the telescope nearly perpendicular to the scale at the beginning then y_0 is close to the telescope, and the difference between two elongations $(\Delta L_2 - \Delta L_1)$ is very accurately given by

$$\Delta L_2 \;-\; \Delta L_1 = \frac{y_2\; d}{2D} - \frac{y_1\; d}{2D} = \frac{(y_2 - y_1)d}{2D}$$

where y_i is the scale reading. This relation holds so long as 2θ is small enough that $\tan 2\theta \;\sim\; 2\theta$.

D. PARALLAX and Notes on using a Telescope

1. *PARALLAX*:

   To do quantitative work in optics one must understand *parallax* and how it may be eliminated. PARALLAX is defined as *apparent motion of an object caused by actual motion of the observer*.

   When the observer's eye is in position 1, objects 1 and 2 are in line and may appear to coincide. If the eye is moved to the left to position two, object 1 (i.e. O_1) appears to move to the left with respect to object 2, (i.e. O_2). If the eye moves to the right to position 3, object 1 (O_1) appears to move to the right with respect to object 2 (O_2).

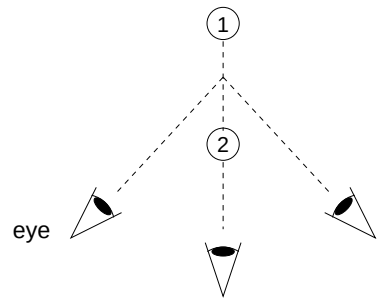

   As object 1 moves toward position 2 along the dotted line, its apparent displacement with respect to object 2 caused by motion of the eye from 2 to 3 gets smaller until it vanishes when O_1 and O_2 coincide. When O_1 gets closer to the eye than O_2, the direction of its apparent displacement reverses for the same eye motion. In short, the object farthest from the eye apparently moves in the same direction as the eye. Try this with two fingers.

   Note that if O_1 is an image and O_2 a cross hair, the absence of parallax shows that the cross hairs are in the plane of the image.

2. *Focusing a Telescope for Parallel Rays*:

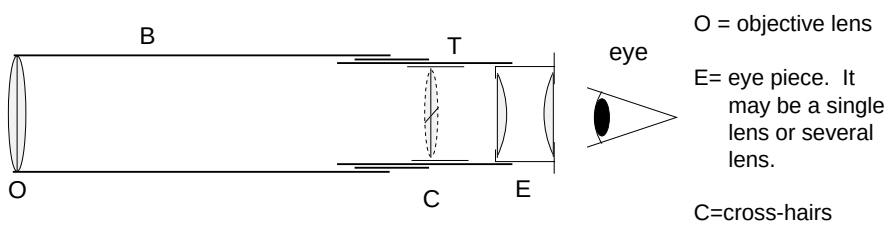

   The eyepiece E slides back and forth in the tube T and one should first adjust the eyepiece to give a clear image of the cross hairs. Then move the tube T back and forth in the barrel B until the image of a distant object, formed by the objective O, falls on the plane of the cross hairs. The test for this is the absence of parallax between the cross hairs and image.

   The rays from a distant object are nearly parallel. For viewing a distant object, use an open window if the window glass is not accurately plane. Otherwise poor image formation may result. You can check by trying it both ways. At night use a distant object in the hallway.

   The telescope, now focused for parallel rays, will stay so as long as the distance between O and C is unchanged. One may still adjust the eyepiece position to suit the observer.

3. *Finding an Image in a Telescope*:

If you have trouble finding an image in a telescope, locate the image first with your unaided eye, and then pull the telescope in front of your eye, aligning it with your line of sight. With high magnification it is difficult to find the image in the telescope because the alignment must be nearly perfect before the image appears in the field of view. The eye has a rather large field of view so that the image will be visible over a range of positions.

E. Notes on Radiation Dosage, Dosimetry, and the Radon Problem

INTRODUCTION:

The biological effects of radiation arise from the absorption of the radiant energy to produce heat, electronic excitation and/or ionization.

Radio, T.V., microwave, visible light, u.v. light, x-rays, γ-rays are all electromagnetic radiation and differ only in wavelength. Electromagnetic radiation may have both beneficial and harmful effects: e.g. u.v. light absorbed by the skin can supply needed vitamin D, but excess u.v. radiation accounts for much skin cancer. X-rays and γ-rays are more penetrating and so can affect tissue below the skin.

Besides electromagnetic radiation one has high velocity charged (and neutral) particles. From *naturally* radioactive materials, the charged particles are either high speed electrons (β's, beta rays) or alpha particles (α's, the nuclei of helium atoms). Both types are rather easily stopped by a small thickness of matter e.g. $\sim$ 1.8 mm Al stops 1.17 MeV β's from RaE, and $\sim$ 0.06 mm Al stops 5.3 Mev α's from Po. Hence natural radioactivities are normally of little concern unless the parent nucleus has been inhaled or ingested in the body. The biological effects of neutral particles (e.g. neutrons and neutrinos) from naturally radioactive materials are normally negligible.

Radioactivity unit: 1 Becquerel (Bq) = 1 disintegration/s $\cong$ 27 pCi (picoCurie)

Radiation dose is the radiant energy absorbed per unit mass.

Dose UNITS: 0.01 J of radiation absorbed/kg of mass = 1 rad
1 J of radiation absorbed/kg of mass = 1 gray (abbreviated **Gy**)

Dose Equivalent: includes the long term *relative biological effects of different types of radiation*. The original unit was the **rem** (**r**ad **e**quivalent **m**an), but the now recommended S.I. unit is the **sievert** (abbreviated Sv) with:

$$1 \text{ Sv} = 100 \text{ rem} = 10^5 \text{ mrem}$$

and so: 1 mSv = 100 mrem

Federal laws on permissible doses are:

1. For workers, < 50 mSv/year for a whole body dose, but employer must follow the ALARA (**A**s **L**ow **A**s **R**esonably **A**chievable) principle. For the hands alone, 750 mSv/yr are allowed.

2. For the general population < 5 mSv/yr whole body dose.

RADIATION SOURCES:

Besides the sun's u.v. radiation, the natural environment contributes an unavoidable dose equivalent to $\sim$ 1.3 mSv/yr plus a variable dose from inhaled radon which often is several times larger: see **The Radon Problem** (below). **Hence the average natural background radiation dose is $\sim$ 3 mSv/yr**. About .25 mSv/yr of this dose comes from internal radioactivities in the body (chiefly ^{40}K which constitutes 0.0119% of natural K and has $T_{1/2} \sim 10^9$ years). The rest comes from external

natural radioactivities in the earth (chiefly decay chains of uranium and thorium, $T_{1/2} \sim 4 \times 10^9$ years and $T_{1/2} \sim 10^{10}$ years) and from cosmic rays. The cosmic ray contribution increases with altitude and is $\sim$ 30 mSv/yr at 40,000 feet elevation (jet airplane altitudes).

Brick and stone houses often have larger backgrounds. Living in Denver (elevation 5200 ft.) contributes an additional $\sim$ 0.7 mSv/yr. In the Kerala region of India and the Espirito Santo region of Brazil, natural sources give $\sim$ 30 mSv/yr with no obvious abnormality resulting to the indigenous population so the Federal regulations seem very conservative for the general population.

Man-made radiation exposure averages $\sim$ .7 mSv/yr and comes almost exclusively from medical and dental x-rays. A single dental x-ray may involve 7 mSv to the skin. Exposures from nuclear power generating stations are nearly zero. In fact, per KWH of electricity generated, the radioactivity released from coal fired plants is often high compared to that permitted from nuclear plants since many coals contain appreciable uranium and/or thorium plus the equilibrium decay products from these long-lived radioactive nuclei.

For perspective on radiation exposure, Prof. Cameron formerly of the UW Medical Physics Dept. suggests translating doses into a natural unit, the **BERT** defined as the **B**ackground **E**quivalent **R**adiation **T**ime. Thus a **BERT equal to 1 yr would correspond to 3 mSv** (see above discussion on average background dose).

THE RADON PROBLEM:

Radon (an inert gas) from decay of naturally occurring U and Th in the earth continually diffuses into the atmosphere and may cause $\sim$ 10,000 lung cancer cases per year in the U.S. The radon content of outdoor air 1 meter above ground typically gives 4 to 15 becquerels/m^3 The health effects come mainly from inhalation of ^{222}Rn (from U)since this radon isotope has a $T_{1/2}$ of 3.82 days whereas the thorium radon isotope (^{220}Rn) has $T_{1/2}$ of only 56 seconds. The indoor air concentration of radon ($\sim$ 50 Bq/m^3) varies perhaps a factor of a thousand from location to location, depending upon the U content and physical characteristics of the soil, moisture content, building construction, winds, etc. (A house in Maine had a record $\sim$ 160,000 Bq/m^3!)

A radon concentration of 50 Bq/m^3 may result in an annual dose equivalent to bronchial epithelium (site of most radiation induced lung cancer) of $\sim$ 2.5 mSv/yr. Perhaps 25% of Wisconsin houses have concentrations $>$ 150 Bq/m^3 which is the EPA guideline where action should be taken in a few years since the lung cancer risk may be comparable to smoking 3 to 10 cigarettes/day. (M.S. Blumenthal, **Wisconsin Medical Journal**, Vol. 87, May 1988, p.17) In fact 2% of U.S. homes have radon concentrations $>$ 300 Bq/m^3 and occupants should take action to reduce the concentration since they may be receiving an effective dose of $>\sim$ 16 mSv/yr. (By contrast the EPA limit for off-site exposure from nuclear reactors or from nuclear waste depositories is only .25 mSv/yr!) (Bodansky, **Physics and Society** 16, No. 4, p. 6, 1987).

If a house has high radon levels, then the radon ingress usually is from air infiltration from soil beneath the house. Natural convection in the house (chimney effect) tends

to pull in the radon contaminated air. A solution is to drive pipes through the basement floor and connect them to fans exhausting to the outside air. See A. V. Nero Jr. "The Indoor Radon Story", **Technology Review** Vol.89, No. 1, p. 28, (1986); also A. Nero, "Earth, Air, Radon and Home", **Physics Today**, Vol 42, No. 4, p.32, (1989).

A good general reference on the subject is **"Radon and its Decay Products in Indoor Air"** edited by William Nazaroff and A.V. Nero, Jr., John Wiley & Sons, 1988. Ground water supplies often contain high concentrations of radon from uranium decay in the aquifers. The radon concentration in public ground water supplies averages ~ 5000 Bq/m^3, and is much higher in some of the New England states. The health hazard is apparently not from drinking the water, but from the water's contribution to the indoor radon air problem: perhaps ~ 5 Bq/m^3. Private wells often have high concentrations. Storage or aeration of the water provides effective control of the hazard.

OTHER ISSUES:

Is a Small Amount of Radiation Healthy - The Hormesis Effect

The following is from RADIATION DOSIMETRY by former Prof. John R. Cameron, Department of Medical Physics, UW, Madison:

> "Studies on nuclear workers often show that they have less cancer than other member of the population and even of other workers with similar jobs. This is usually explained as the 'healthy worker' effect. That is, for reasons not understood, radiation work attract healthy workers. An alternate explanation which is rarely mentioned is the possibility that a small amount of radiation is good for you. This is referred to as the 'hormesis' effect. Since humans and all of our ancestors evolved in a sea of natural radiation, it is possible that mutations have occurred that produce the hormesis effect. Animal experiments have demonstrated the hormesis effect. Rats exposed to increased radiation have a longer survival than their controls."

F. PASCO© Interface and Computer Primer

INTRODUCTION:

The Physics 201/207 207/208 laboratories utilize a Web-browser based display format in combination, when necessary, computer controlled data acquisition interface (typically the PASCO CI-700 or 750). Various sensors are plugged into either digital I/O (phone jack style inputs 1 to 4) or analog I/O ports (DIN-9 style inputs A, B and C). To aid in the data acquisition and analysis PASCO module also requires use of a special purpose software package which can be easily reconfigured for the particular need of a experiment. In general all experiment starting configuration will be preset and launched through a Web-browser button at the appropriate place in the lab.

THE MOUSE

CLICKING: Most of the operations of your computer are controlled by locating the cursor on the appropriate symbol (icon) and by clicking (CLICK) or double clicking (DCLICK) the *left* button of the mouse.
If the operation you have to perform requires clicking the right button this will be shown by CLICK-R or DCLICK-R. Double clicking means pressing the mouse button twice in rapid sequence *without moving the mouse*. The image of an hour glass appears momentarily indicating that the computer is loading the program, that is, getting ready to do what you requested. It will not do this if you moved the mouse while double clicking.

WINDOWS

The monitor usually displays various "windows" with a title bar. If you CLICK anywhere inside the window, the title bar turns blue, and the window is "active" (i.e. the computer will respond to any clicks on the "icons" on the border of the window).
BASIC OPTIONS:

I. CLICK on the head bar to "drag" the window to a different position.
II. Enlarge the window by placing the cursor on the corner, a diagonal arrow will appear, then CLICK and drag to change the size of the window.

Depending on which experiment you are performing you will see various windows. These will be discussed separately.

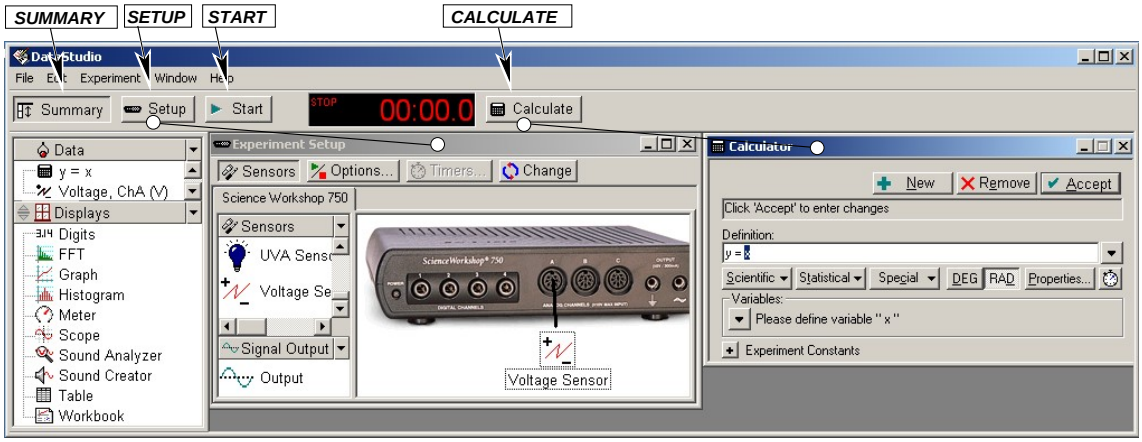

Figure 1: The main PASCO Data Studio window

ICONS:

- SUMMARY: CLICKing on this alternately opens and closes the summary area on left (i.e., frame with Data and Displays).
- SETUP: CLICKing on this open the "Experiment Setup" window.
- START: CLICKing on this begins the data acquisition and the icons changes to "STOP". CLICKing on the STOP ends the data acquisition.
- CALCULATE: CLICKing on this open a calculator window as shown.

THE GRAPH WINDOW:
Across the top of the graph window you will find a litany of icons: The icons that appear at the top right of all windows are (see Fig. 2):

(a) EXIT: The window is removed permanently.
(b) RESIZE: The size is changed from large to small, or vice-versa.
(c) MINIMIZE: The window is shrunk and should appear as an icon in the Data Studio workspace.

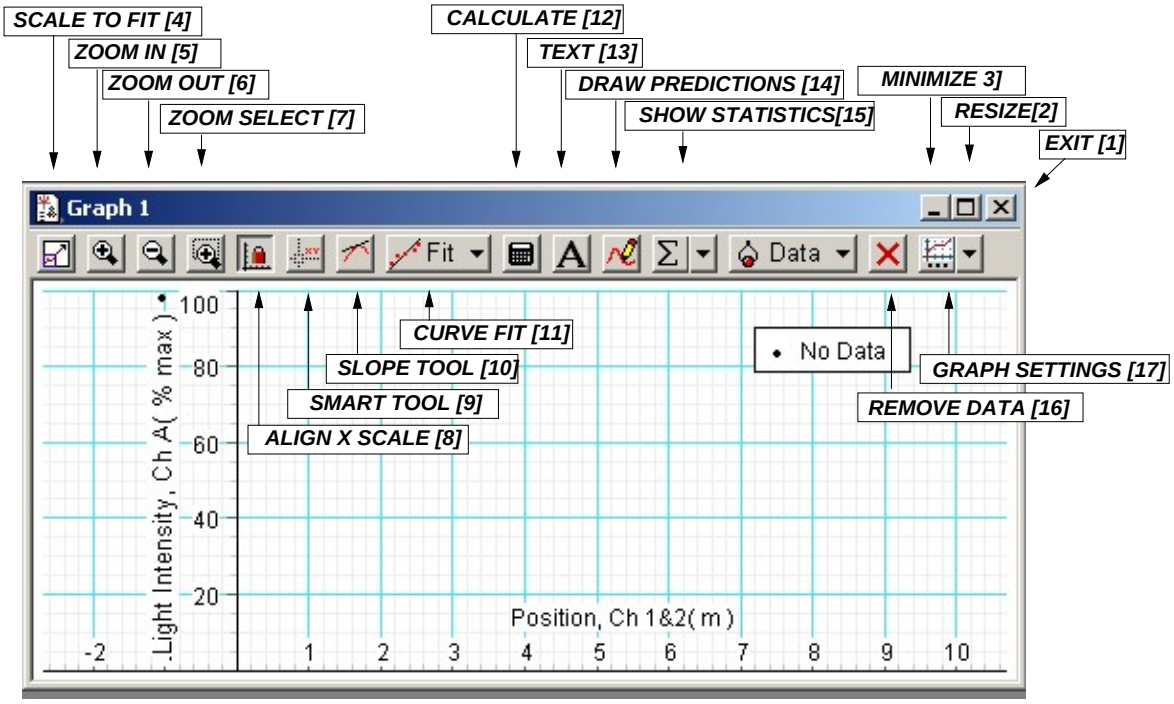

Figure 2: The Graph Window

(d) SCALE TO FIT will rescale the x and y axes to fit the current data set.
(e) ZOOM IN will enhance the size of the graph features.
(f) ZOOM OUT will reduce the size of the graph features.
(g) ZOOM SELECT: After CLICKing on this icon move the cursor into the plot and CLICK then DRAG to select a region of interest. All calculations will refer to this region of interest.
(h) ALIGN X SCALE: If there are multiple graphs this will align all the X axes.
(i) SMART TOOL turns on cross hairs so that graph x,y positions are read out directly.
(j) SLOPE TOOL determines the slope at a point

(k) CURVE FIT
(l) CALCULATE launches the calculator applications
(m) TEXT
(n) DRAW PREDICTIONS
(o) SHOW STATISTICS shows/hides statistics for a selected region of interest. You must first select the area of the graph you want to analyze by CLICKing on the ZOOM SELECT icon and the moving to the upper left corner of the ROI. The drag the cursor (CLICK and hold) diagonally across the graph to generate a rectangle that encloses the area chosen.
(p) REMOVE DATA:
(q) GRAPH SETTINGS: This icon allows for complete customization of the plot.

THE EXPERIMENT SETUP WINDOW:

Usually you will find this window in its "minimized" form but this window control the physical instrumentation connected to the PASCO computer interface

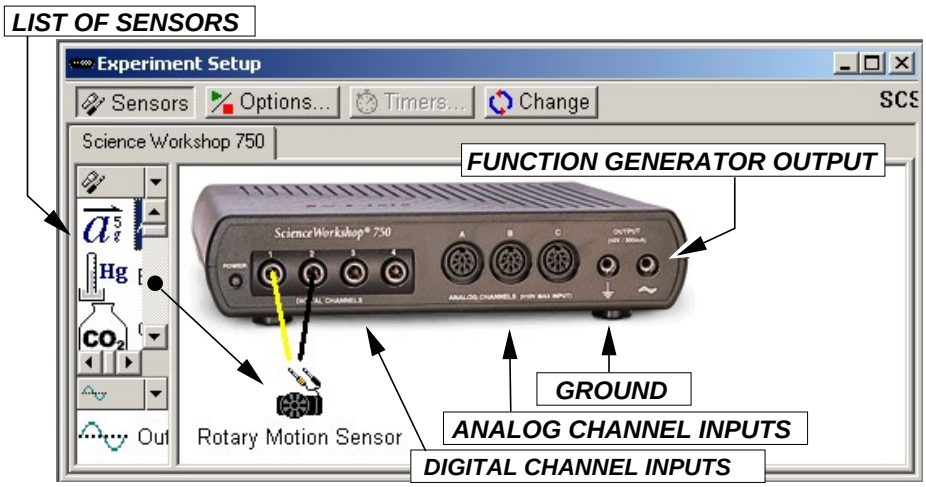

Figure 3: The Experimental Setup Window.

(a) **Sensors** Icon: CLICKing here alternately open and closes the sensor list on left. A sensor must be "grabbed" from the list and then "dropped" onto the appropriate PASCO channel.
(b) **Options** Icon: CLICKing here open a window for various custom data acquisition options (Manual sampling, Delayed acquisition, Automatic start)
(c) **Timers** Icon: CLICKing, if active (by using e.g. the "Time of Flight" sensor), will allow for a customized time sequence.
(d) **Change** Icon: CLICKing here will allow you to change the type of Pasco computer interface (e.g., CI-750, CI-700, etc.)
(e) FUNCTION GENERATOR: Output from a built-in signal generator (e.g. sine or square waves) and allows control of both frequency and amplitude.
(f) DIGITAL CHANNELS: These components produce or require signals (i.e., input/output) that switch between two levels, typically 0 and 5 volts. NOTE: Exceeding 10 volts may damage the port.
(g) ANALOG CHANNELS: These components produce or require signals that have a large range of values. If voltage is specified then the range is typically between -5 and 5 volts. NOTE: Exceeding 10 volts may damage the port.
(h) GROUND: Electrical access for *signal ground*. Note that this does not necessarily mean the ground of the outlet.

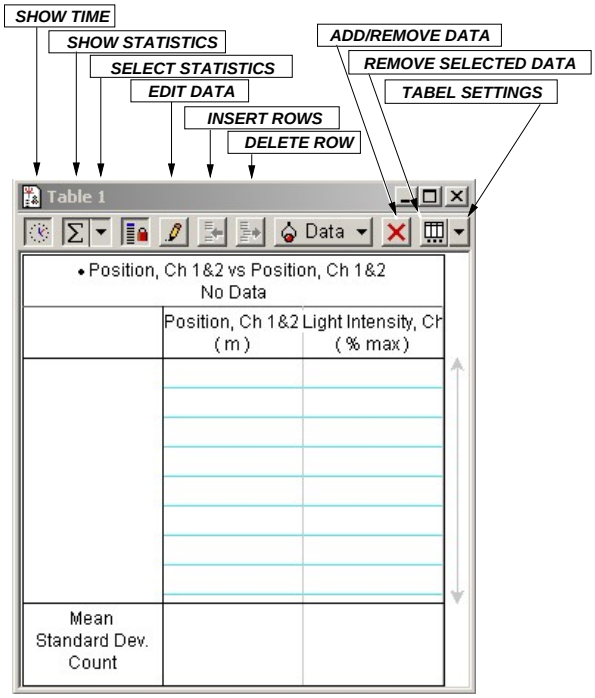

Figure 4: The Table Window

THE TABLE WINDOW:

(a) SHOW TIME: Alter the display to include time at which data was recorded.
(b) SHOW STATISTICS: Toggles off and on a display for various selected values including: minimum, maximum, mean, standard deviation and the count.
NOTE: Subsets of the full data set can be analyzed by using the mouse and highlighting (through a CLICK and drag motion) the rows of interest.
(c) Almost all of the headings are self explanatory.